newform

DELTA ZERO

72200.01.093

3-hole basin group. 1/2" T piece - finish Matt Black

Without pop-up waste set

SAVE WATER

Matt Black

FEATURES

Material	**Brass**
Technology	**Save Water**
Installation	**Freestanding**
Hole type	**3 holes**
Waste / Drain set	**Without waste set**
Water mixing	**Mechanical**

TECHNICAL DRAWING

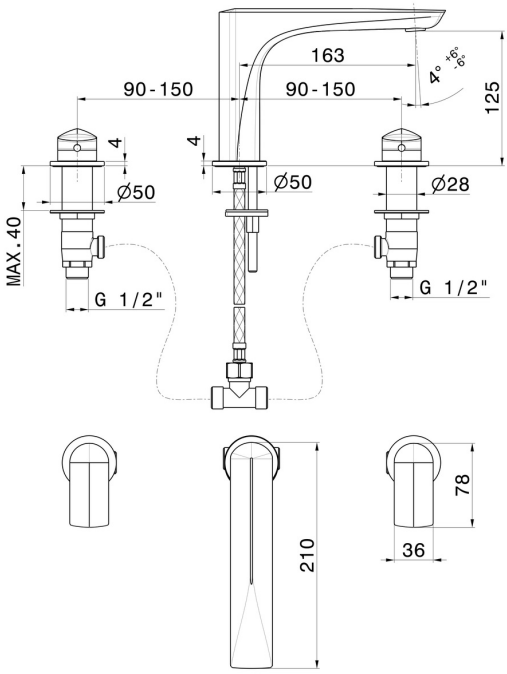

newform

DELTA ZERO

72200.01.093

3-hole basin group. 1/2" T piece - finish Matt Black

AVAILABLE FINISHES

01.093
Matt Black

01.014
finish Matt White

21.018
finish Chrome

58.061
finish PVD Copper Bronze

58.063
finish PVD Gun Metal

59.064
finish PVD Brushed Gun Metal

59.067
finish PVD Brushed Copper Bronze

59.097
finish PVD Brushed Gold

61.020
finish PVD Glossy Gold