newform

NIO

68901.59.097

3-hole basin group - finish PVD Brushed Gold

SAVE WATER

PVD Brushed Gold

FEATURES

Material	**Brass**
Technology	**Save Water**
Installation	**Freestanding**
Hole type	**3 holes**
Waste / Drain set	**With waste set**
Water mixing	**Mechanical**

TECHNICAL DRAWING

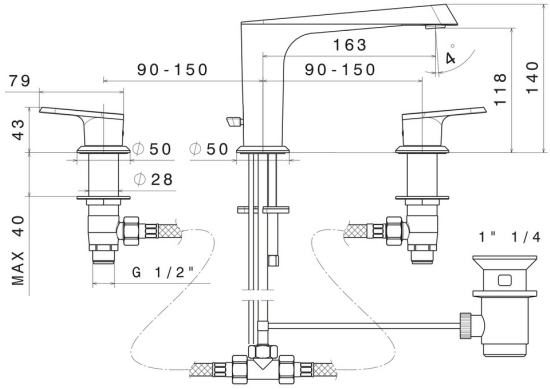

newform

NIO

68901.59.097

3-hole basin group - finish PVD Brushed Gold

AVAILABLE FINISHES

59.097
PVD Brushed Gold

01.093
finish Matt Black

21.018
finish Chrome

59.066
finish PVD Brushed steel