newform

BLINK CHIC

71037.58.063

3-hole bidet group - finish PVD Gun Metal

Without pop-up waste set

SAVE WATER

PVD Gun Metal

FEATURES

Material	**Brass**
Technology	**Save Water**
Installation	**Freestanding**
Hole type	**3 holes**
Waste / Drain set	**Without waste set**
Water mixing	**Mechanical**

TECHNICAL DRAWING

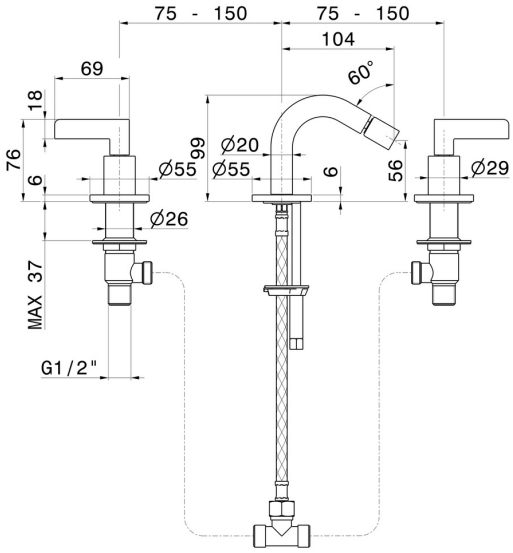

newform

BLINK CHIC

71037.58.063

3-hole bidet group - finish PVD Gun Metal

AVAILABLE FINISHES

58.063
PVD Gun Metal

01.093
finish Matt Black

21.018
finish Chrome

47.083
finish Groove Bronze

58.061
finish PVD Copper Bronze

59.098
finish PVD Brushed Pale Gold

61.020
finish PVD Glossy Gold