newform

BLINK CHIC

71137.47.083

3-hole bidet group - finish Groove Bronze

Luxury. Without pop-up waste set

SAVE WATER

Groove Bronze

FEATURES

Material	**Brass**
Technology	**Save Water**
Installation	**Freestanding**
Hole type	**3 holes**
Waste / Drain set	**Without waste set**
Water mixing	**Mechanical**

TECHNICAL DRAWING

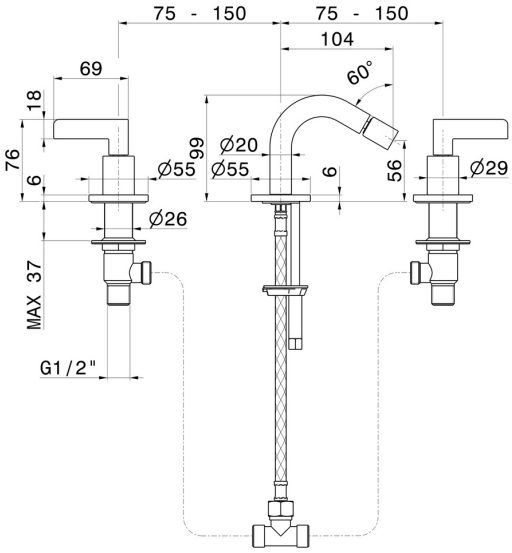

newform

BLINK CHIC

71137.47.083

3-hole bidet group - finish Groove Bronze

AVAILABLE FINISHES

47.083
Groove Bronze

01.093
finish Matt Black

21.018
finish Chrome

58.061
finish PVD Copper Bronze

58.063
finish PVD Gun Metal

59.098
finish PVD Brushed Pale Gold

61.020
finish PVD Glossy Gold