newform

XT

4284C.59.066

3-hole complete set of deck-mounted mixer, diverter and hand shower set - finish PVD Brushed steel

SAVE WATER

PVD Brushed steel

FEATURES

Material	**Brass**
Technology	**Save Water**
Installation	**Deck-mounted**
Hole type	**3 holes**
Diverter type	**Mechanic diverter**
Water mixing	**Mechanical**

TECHNICAL DRAWING

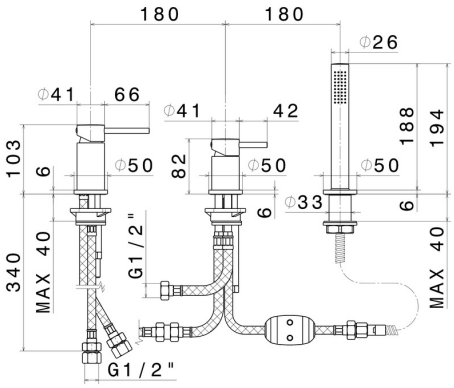

– newform

XT

4284C.59.066

3-hole complete set of deck-mounted mixer, diverter and hand shower set - finish PVD Brushed steel

AVAILABLE FINISHES

59.066
PVD Brushed steel

01.014
finish Matt White

01.093
finish Matt Black

21.018
finish Chrome

47.083
finish Groove Bronze

58.061
finish PVD Copper Bronze

58.063
finish PVD Gun Metal

59.064
finish PVD Brushed Gun Metal

59.067
finish PVD Brushed Copper Bronze

59.097
finish PVD Brushed Gold

61.020
finish PVD Glossy Gold

M0.070
finish Titanium Satin

– newform

M0.071
finish Gold Satin

M0.072
finish Copper Satin

M0.075
finish Copper Glossy

M0.077
finish Carbon Satin