newform

IONIKA ALLURE

73020E.59.066

3-hole wall-mounted washbasin group - finish PVD Brushed steel

External part. Without pop-up waste set

SAVE WATER

PVD Brushed steel

FEATURES

Material	**Brass/Marble**
Technology	**Save Water**
Installation	**Wall concealed part**
Spout	**Standard spout**
Hole type	**3 holes**
Waste / Drain set	**Without waste set**
Water mixing	**Mechanical**
Required for installation	**31079.00.000**

TECHNICAL DRAWING

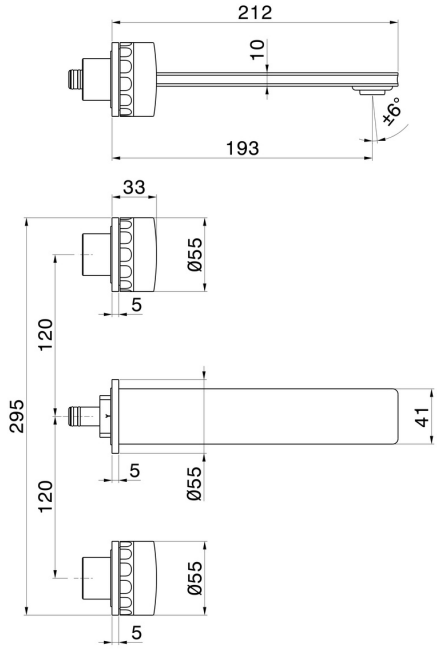

newform

IONIKA ALLURE

73020E.59.066

3-hole wall-mounted washbasin group - finish PVD Brushed steel

AVAILABLE FINISHES

59.066
PVD Brushed steel

01.014
finish Matt White

01.093
finish Matt Black

21.018
finish Chrome

59.064
finish PVD Brushed Gun Metal

59.067
finish PVD Brushed Copper Bronze

59.098
finish PVD Brushed Pale Gold

61.020
finish PVD Glossy Gold