newform

70447e.01.093

3 ways out thermostatic concealed mixer, with one handle for temperature control and buttons on/off. External part - finish Matt Black

Matt Black

FEATURES

Material	**Brass**
Installation	**Wall concealed part**
Control type	**Single lever**
Outlets	**3 Ways Out**
Water mixing	**Thermostatic**
Required for installation	**27752.00.000**

TECHNICAL DRAWING

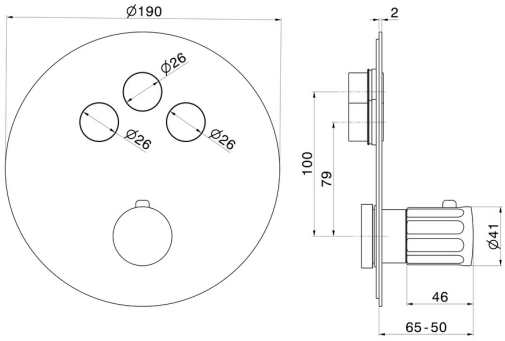

– newform

70447e.01.093

3 ways out thermostatic concealed mixer, with one handle for temperature control and buttons on/off. External part - finish Matt Black

AVAILABLE FINISHES

01.093
Matt Black

01.014
finish Matt White

21.018
finish Chrome

59.064
finish PVD Brushed Gun Metal

59.066
finish PVD Brushed steel

59.067
finish PVD Brushed Copper Bronze

59.098
finish PVD Brushed Pale Gold

61.020
finish PVD Glossy Gold