newform

O'RAMA

68482C.M2.071

4-hole complete set of deck-mounted mixer - finish Gold Satin - Matt black

Spout, diverter and brass hand shower set

SAVE WATER

Gold Satin - Matt black

FEATURES

Material	**Brass**
Technology	**Save Water**
Installation	**Deck-mounted**
Hole type	**4 holes**
Diverter type	**Mechanic diverter**
Water mixing	**Mechanical**

TECHNICAL DRAWING

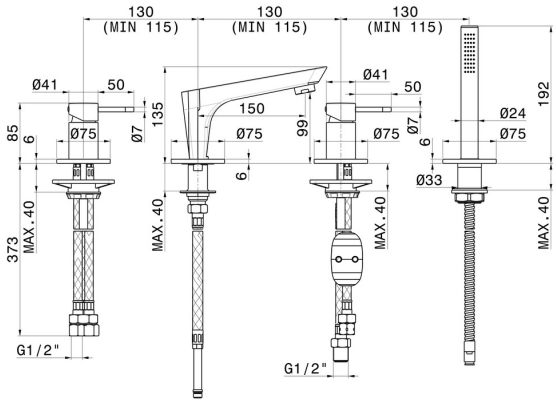

newform

O'RAMA

68482C.M2.071

4-hole complete set of deck-mounted mixer - finish Gold Satin - Matt black

AVAILABLE FINISHES

M2.071
Gold Satin - Matt black

01.093
finish Matt Black

05.093
finish Chrome - Matt Black

61.020
finish PVD Glossy Gold

M2.070
finish Titanium Satin - Matt black

M2.072
finish Copper Satin - Matt black

M2.075
finish Copper Glossy