newform

DELTA ZERO

72282C.61.020

4-hole complete set of deck-mounted mixer - finish PVD Glossy Gold

Spout, diverter and brass hand shower set

SAVE WATER

PVD Glossy Gold

FEATURES

Material	**Brass**
Technology	**Save Water**
Installation	**Freestanding**
Hole type	**4 holes**
Diverter type	**Mechanic diverter**
Water mixing	**Mechanical**

TECHNICAL DRAWING

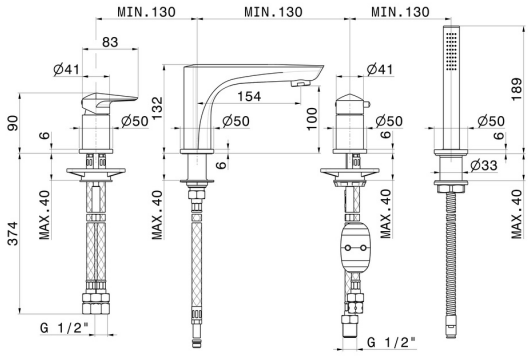

newform

DELTA ZERO

72282C.61.020

4-hole complete set of deck-mounted mixer - finish PVD Glossy Gold

AVAILABLE FINISHES

61.020
PVD Glossy Gold

01.014
finish Matt White

01.093
finish Matt Black

21.018
finish Chrome

58.061
finish PVD Copper Bronze

58.063
finish PVD Gun Metal

59.064
finish PVD Brushed Gun Metal

59.067
finish PVD Brushed Copper Bronze

59.097
finish PVD Brushed Gold