newform

LINFA II

69471E.01.093

Bath group. Ø70 - finish Matt Black

Consisting of: concealed single lever bath mixer with diverter, wall spout and shower set.

SAVE WATER

Matt Black

FEATURES

Material	**Brass**
Technology	**Save Water**
Installation	**Wall concealed part**
Hole type	**4 holes**
Diverter type	**Mechanic diverter**
Water mixing	**Mechanical**
Required for installation	**31088.00.000**

TECHNICAL DRAWING

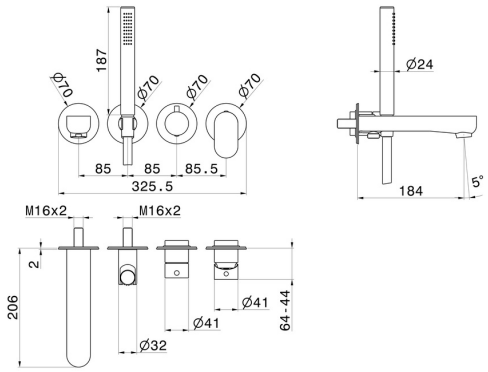

– newform

LINFA II

69471E.01.093

Bath group. Ø70 - finish Matt Black

AVAILABLE FINISHES

01.093
Matt Black

01.014
finish Matt White

21.018
finish Chrome

M0.070
finish Titanium Satin

M0.071
finish Gold Satin

M0.072
finish Copper Satin

M0.075
finish Copper Glossy