newform

72841.59.098

Cold body bath column with external thermostatic mixer with diverter, head and shower - finish PVD Brushed Pale Gold

SAVE WATER

PVD Brushed Pale Gold

FEATURES

Material	**Brass**
Technology	**Save Water**
Installation	**Wall mounted**
Control type	**Single lever**
Diverter type	**Mechanic diverter**
Water mixing	**Thermostatic**

TECHNICAL DRAWING

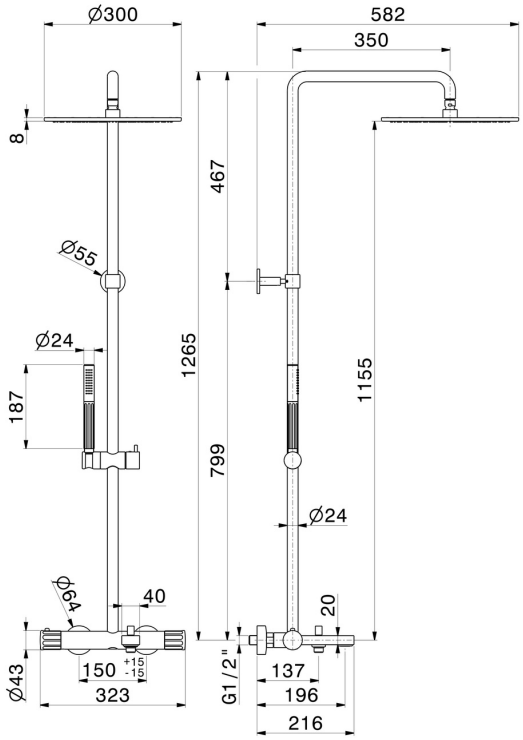

– newform

72841.59.098

Cold body bath column with external thermostatic mixer with diverter, head and shower - finish PVD Brushed Pale Gold

AVAILABLE FINISHES

59.098
PVD Brushed Pale Gold

01.014
finish Matt White

01.093
finish Matt Black

21.018
finish Chrome

59.064
finish PVD Brushed Gun Metal

59.066
finish PVD Brushed steel

59.067
finish PVD Brushed Copper Bronze

61.020
finish PVD Glossy Gold