newform

X-STEEL 316

69667EX.59.097

Complete concealed shower group - finish PVD Brushed Gold

External part. With shower set and 2 ways out diverter

SAVE WATER

PVD Brushed Gold

FEATURES

Material	**Stainless Steel**
Technology	**Save Water**
Installation	**Wall concealed part**
Hole type	**3 holes**
Diverter type	**Mechanic diverter**
Outlets	**2 Ways Out**
Water mixing	**Mechanical**

Required for installation	**31086.00.000**

TECHNICAL DRAWING

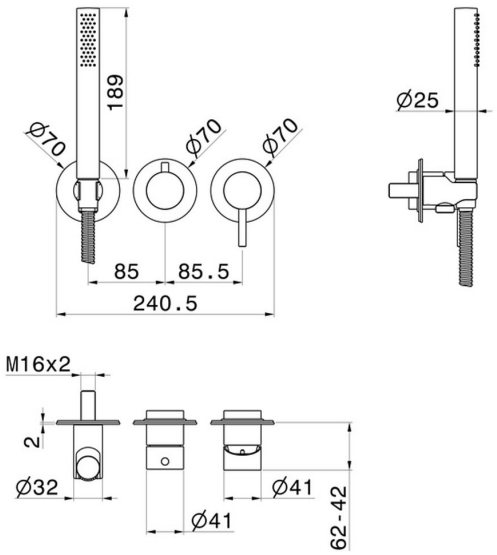

newform

X-STEEL 316

69667EX.59.097

Complete concealed shower group - finish PVD Brushed Gold

AVAILABLE FINISHES

59.097
PVD Brushed Gold

50.050
finish Stainless Steel

59.064
finish PVD Brushed Gun Metal

59.067
finish PVD Brushed Copper Bronze

59.098
finish PVD Brushed Pale Gold