newform

LINFA II

69468E.01.014

Complete concealed shower group, with shower set and 2 ways out diverter. Ø70 - finish Matt White

External part

SAVE WATER

Matt White

FEATURES

Material	**Brass**
Technology	**Save Water**
Installation	**Wall concealed part**
Hole type	**3 holes**
Diverter type	**Mechanic diverter**
Water mixing	**Mechanical**
Required for installation	**31086.00.000**

TECHNICAL DRAWING

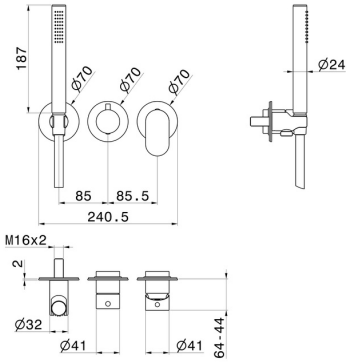

newform

LINFA II

69468E.01.014

Complete concealed shower group, with shower set and 2 ways out diverter. Ø70 - finish Matt White

AVAILABLE FINISHES

01.014
Matt White

01.093
finish Matt Black

21.018
finish Chrome

M0.070
finish Titanium Satin

M0.071
finish Gold Satin

M0.072
finish Copper Satin

M0.075
finish Copper Glossy

M0.077
finish Carbon Satin