newform

# IONIKA SUPREME

## 72969E.01.093

Complete concealed shower group, with shower set and 2 ways out diverter - finish Matt Black

External part

SAVE WATER

Matt Black

## FEATURES

| | |
|---|---|
| Material | **Brass/Marble** |
| Technology | **Save Water** |
| Installation | **Wall concealed part** |
| Hole type | **3 holes** |
| Outlets | **2 Ways Out** |
| Water mixing | **Mechanical** |
| Required for installation | **31086.00.000** |

## TECHNICAL DRAWING

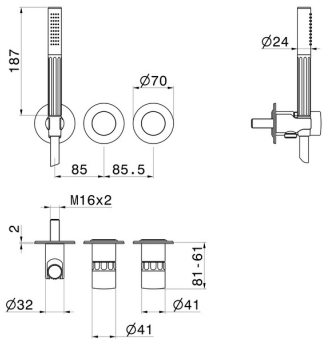

newform

## IONIKA SUPREME

**72969E.01.093**

Complete concealed shower group, with shower set and 2 ways out diverter - finish Matt Black

### AVAILABLE FINISHES

**01.093**
Matt Black

**01.014**
finish Matt White

**21.018**
finish Chrome

**59.064**
finish PVD Brushed Gun Metal

**59.066**
finish PVD Brushed steel

**59.067**
finish PVD Brushed Copper Bronze

**59.098**
finish PVD Brushed Pale Gold

**61.020**
finish PVD Glossy Gold