newform

N21

71720.31.028

Complete set consisting of single-lever sink mixer and L swivel spout - finish Brushed Nickel

SAVE WATER

LOW LEAD

Brushed Nickel

FEATURES

Material	**Brass**
Technology	**Low Lead - Save Water**
Installation	**Freestanding**
Kitchen mixer spout	**L swivel - Swivel spout**
Control type	**Single lever**

TECHNICAL DRAWING

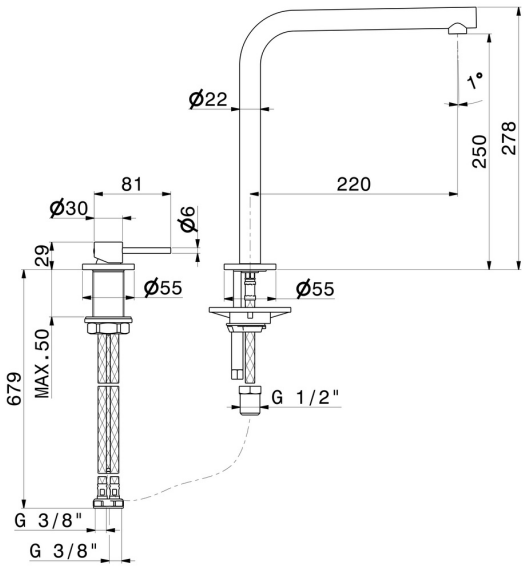

newform

N21

71720.31.028

Complete set consisting of single-lever sink mixer and L swivel spout - finish Brushed Nickel

AVAILABLE FINISHES

31.028
Brushed Nickel

01.093
finish Matt Black

21.018
finish Chrome

59.064
finish PVD Brushed Gun Metal

59.066
finish PVD Brushed steel

59.067
finish PVD Brushed Copper Bronze

59.098
finish PVD Brushed Pale Gold

M0.077
finish Carbon Satin