newform

N21

71730.59.067

Complete set consisting of single-lever sink mixer, round swivel spout and “sidespray” shower hand - finish PVD Brushed Copper Bronze

SAVE WATER

LOW LEAD

PVD Brushed Copper Bronze

FEATURES

Material	**Brass**
Technology	**Low Lead - Save Water**
Installation	**Freestanding**
Kitchen mixer spout	**Round spout - Swivel spout**
Control type	**Single lever**

TECHNICAL DRAWING

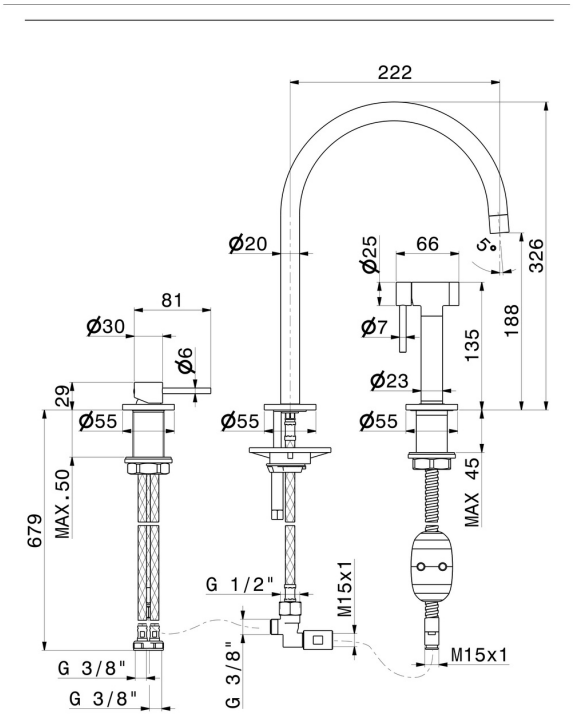

newform

N21

71730.59.067

Complete set consisting of single-lever sink mixer, round swivel spout and “sidespray” shower hand - finish PVD Brushed Copper Bronze

AVAILABLE FINISHES

59.067
PVD Brushed Copper Bronze

01.093
finish Matt Black

21.018
finish Chrome

31.028
finish Brushed Nickel

59.064
finish PVD Brushed Gun Metal

59.066
finish PVD Brushed steel

59.098
finish PVD Brushed Pale Gold

M0.077
finish Carbon Satin