newform

N21

71730.59.098

Complete set consisting of single-lever sink mixer, round swivel spout and “sidespray” shower hand - finish PVD Brushed Pale Gold

SAVE WATER

LOW LEAD

PVD Brushed Pale Gold

FEATURES

Material	**Brass**
Technology	**Low Lead - Save Water**
Installation	**Freestanding**
Kitchen mixer spout	**Round spout - Swivel spout**
Control type	**Single lever**

TECHNICAL DRAWING

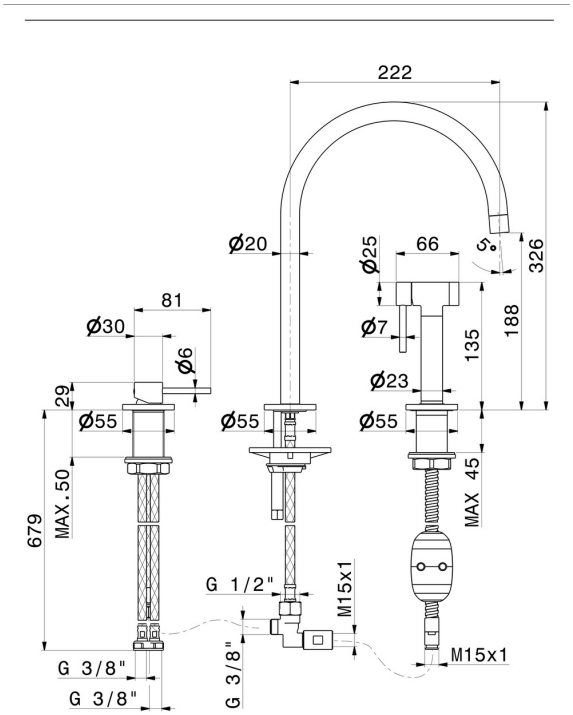

– newform

N21

71730.59.098

Complete set consisting of single-lever sink mixer, round swivel spout and “sidespray” shower hand - finish PVD Brushed Pale Gold

AVAILABLE FINISHES

59.098
PVD Brushed Pale Gold

01.093
finish Matt Black

21.018
finish Chrome

31.028
finish Brushed Nickel

59.064
finish PVD Brushed Gun Metal

59.066
finish PVD Brushed steel

59.067
finish PVD Brushed Copper Bronze

M0.077
finish Carbon Satin