newform

71056.61.020

Complete shower set, with brass hand shower, L=150 cm flexible - finish PVD Glossy Gold

SAVE WATER

PVD Glossy Gold

FEATURES

Material	**Brass**
Technology	**Save Water**
Installation	**Wall mounted**
Water mixing	**Mechanical**

TECHNICAL DRAWING

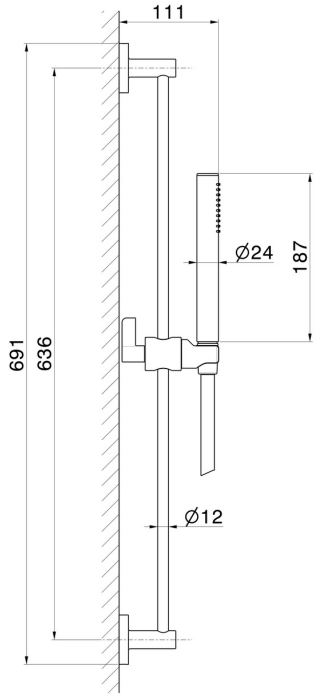

newform

71056.61.020

Complete shower set, with brass hand shower, L=150 cm flexible - finish PVD Glossy Gold

AVAILABLE FINISHES

61.020
PVD Glossy Gold

01.093
finish Matt Black

21.018
finish Chrome

47.083
finish Groove Bronze

58.061
finish PVD Copper Bronze

58.063
finish PVD Gun Metal

59.098
finish PVD Brushed Pale Gold