newform

ALKIMIA

73300.01.093

Complete water filtration and cooling system - finish Matt Black

including: - Sink mixer tap with electronic control; - Carbonated water cooler; - AQA drink AC 100 filter cartridge; - AQA drink MMW nozzle; - CO_2 pressure reducer kit for cylinder with W21.7 joint and 1/4" connection, with max. 4 bar pressure gauge; - CO

SAVE WATER

ENERGY SAVING

Matt Black

FEATURES

Material	**Brass**
Technology	**Energy Saving - Save Water**
Installation	**Freestanding**
Kitchen mixer spout	**Swivel spout**
Control type	**Electronic remote control**

TECHNICAL DRAWING

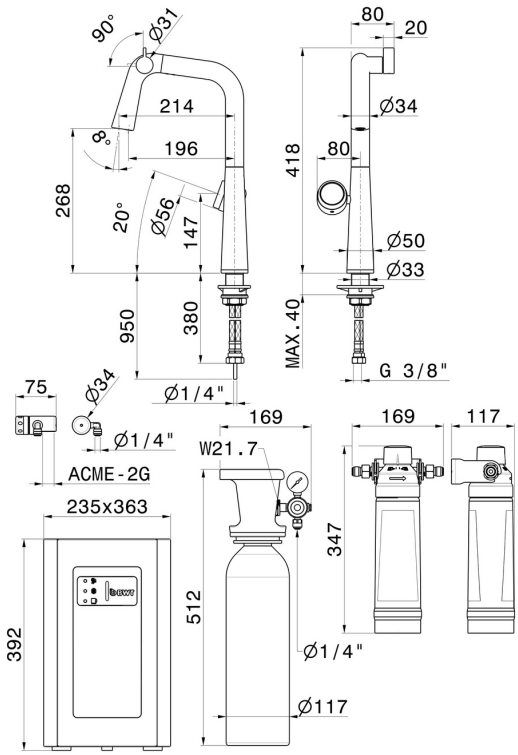

newform

ALKIMIA

73300.01.093

Complete water filtration and cooling system - finish Matt Black

AVAILABLE FINISHES

01.093
Matt Black

01.014
finish Matt White

21.018
finish Chrome

59.064
finish PVD Brushed Gun Metal

59.066
finish PVD Brushed steel

59.067
finish PVD Brushed Copper Bronze

59.098
finish PVD Brushed Pale Gold

M0.077
finish Carbon Satin

S0.165
finish Soft Eucalypt

S0.166
finish Soft Cortex

S0.167
finish Soft Maple

S0.169
finish Soft Navy