newform

ALKIMIA

73300.21.018

Complete water filtration and cooling system - finish Chrome

including: - Sink mixer tap with electronic control; - Carbonated water cooler; - AQA drink AC 100 filter cartridge; - AQA drink MMW nozzle; - CO_2 pressure reducer kit for cylinder with W21.7 joint and 1/4" connection, with max. 4 bar pressure gauge; - CO

SAVE WATER

ENERGY SAVING

Chrome

FEATURES

Material	**Brass**
Technology	**Energy Saving - Save Water**
Installation	**Freestanding**
Kitchen mixer spout	**Swivel spout**
Control type	**Electronic remote control**

TECHNICAL DRAWING

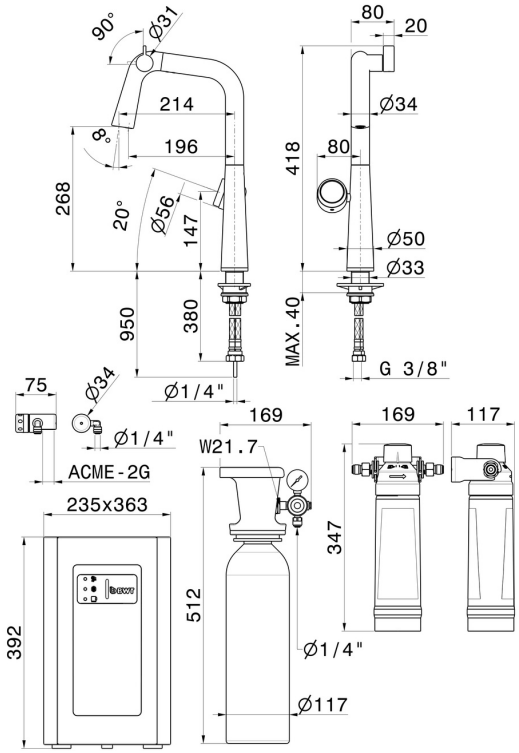

newform

ALKIMIA

73300.21.018

Complete water filtration and cooling system - finish Chrome

AVAILABLE FINISHES

21.018
Chrome

01.014
finish Matt White

01.093
finish Matt Black

59.064
finish PVD Brushed Gun Metal

59.066
finish PVD Brushed steel

59.067
finish PVD Brushed Copper Bronze

59.098
finish PVD Brushed Pale Gold

M0.077
finish Carbon Satin

S0.165
finish Soft Eucalypt

S0.166
finish Soft Cortex

S0.167
finish Soft Maple

S0.169
finish Soft Navy