newform

69857E.59.097

Concealed thermostatic mixer, with one handle for temperature control and 2 ways out diverter. External part - finish PVD Brushed Gold

PVD Brushed Gold

FEATURES

Material	**Brass**
Installation	**Wall concealed part**
Control type	**Single lever**
Diverter type	**Mechanic diverter**
Outlets	**2 Ways Out**
Water mixing	**Thermostatic**
Required for installation	**27888.00.000**
Required for installation	**31020.00.000**
Required for installation	**31061.00.000**

TECHNICAL DRAWING

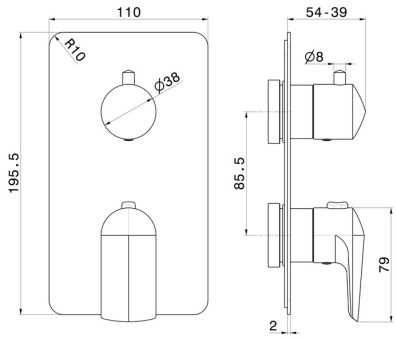

– newform

69857E.59.097

Concealed thermostatic mixer, with one handle for temperature control and 2 ways out diverter.
External part - finish PVD Brushed Gold

AVAILABLE FINISHES

59.097
PVD Brushed Gold

01.014
finish Matt White

01.093
finish Matt Black

21.018
finish Chrome

58.061
finish PVD Copper Bronze

58.063
finish PVD Gun Metal

59.064
finish PVD Brushed Gun Metal

59.067
finish PVD Brushed Copper Bronze

61.020
finish PVD Glossy Gold