newform

NIO

68984E.59.097

Floor mounted bath group - finish PVD Brushed Gold

External part. With mixer, diverter and shower set.

SAVE WATER

PVD Brushed Gold

FEATURES

Material	**Brass**
Technology	**Save Water**
Installation	**Floor concealed part**
Diverter type	**Mechanic diverter**
Water mixing	**Mechanical**
Required for installation	**27819.00.000**

TECHNICAL DRAWING

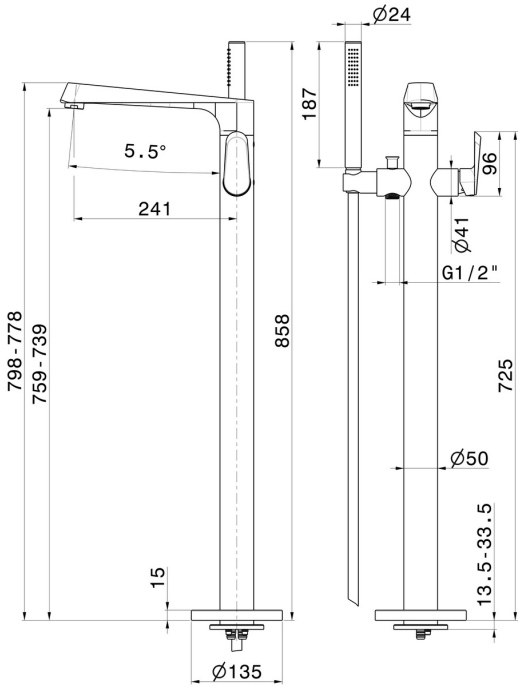

– newform

NIO

68984E.59.097

Floor mounted bath group - finish PVD Brushed Gold

AVAILABLE FINISHES

59.097
PVD Brushed Gold

01.093
finish Matt Black

21.018
finish Chrome

59.066
finish PVD Brushed steel