newform

72851.21.018

Short shower column, cold body with external thermostatic mixer with diverter, head and shower - finish Chrome

SAVE WATER

Chrome

FEATURES

Material	**Brass**
Technology	**Save Water**
Installation	**Wall mounted**
Control type	**Single lever**
Diverter type	**Mechanic diverter**
Water mixing	**Thermostatic**

TECHNICAL DRAWING

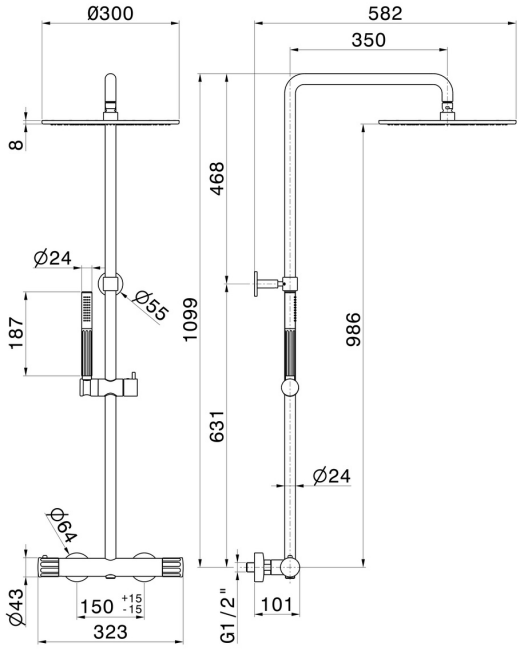

– newform

72851.21.018

Short shower column, cold body with external thermostatic mixer with diverter, head and shower - finish Chrome

AVAILABLE FINISHES

21.018
Chrome

01.014
finish Matt White

01.093
finish Matt Black

59.064
finish PVD Brushed Gun Metal

59.066
finish PVD Brushed steel

59.067
finish PVD Brushed Copper Bronze

59.098
finish PVD Brushed Pale Gold

61.020
finish PVD Glossy Gold