newform

71052.58.061

Shower column with exposed group with diverter, checkable head shower and brass single-jet hand shower set - finish PVD Copper Bronze

SAVE WATER

PVD Copper Bronze

FEATURES

Material	**Brass**
Technology	**Save Water**
Installation	**Wall mounted**
Water mixing	**Mechanical**

TECHNICAL DRAWING

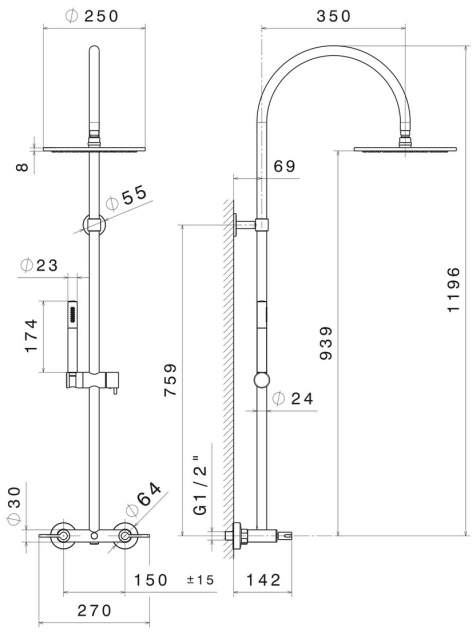

newform

71052.58.061

Shower column with exposed group with diverter, checkable head shower and brass single-jet hand shower set - finish PVD Copper Bronze

AVAILABLE FINISHES

58.061
PVD Copper Bronze

01.093
finish Matt Black

21.018
finish Chrome

47.083
finish Groove Bronze

58.063
finish PVD Gun Metal

59.098
finish PVD Brushed Pale Gold

61.020
finish PVD Glossy Gold