newform

71052.59.098

Shower column with exposed group with diverter, checkable head shower and brass single-jet hand shower set - finish PVD Brushed Pale Gold

SAVE WATER

PVD Brushed Pale Gold

FEATURES

Material	**Brass**
Technology	**Save Water**
Installation	**Wall mounted**
Water mixing	**Mechanical**

TECHNICAL DRAWING

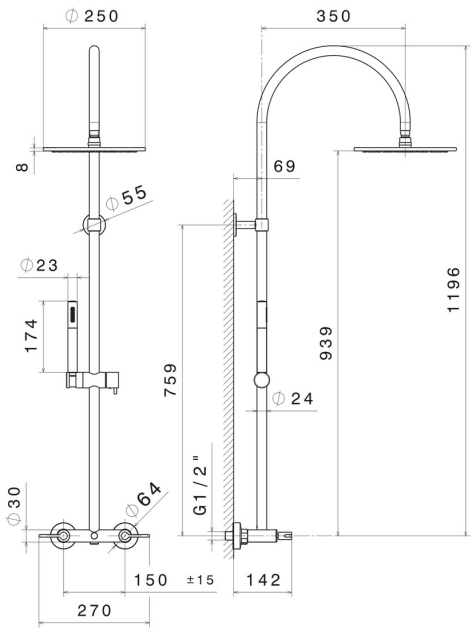

AR Preview
try it in your home

More Details
on our website

– newform

71052.59.098

Shower column with exposed group with diverter, checkable head shower and brass single-jet hand shower set - finish PVD Brushed Pale Gold

AVAILABLE FINISHES

59.098
PVD Brushed Pale Gold

01.093
finish Matt Black

21.018
finish Chrome

47.083
finish Groove Bronze

58.061
finish PVD Copper Bronze

58.063
finish PVD Gun Metal

61.020
finish PVD Glossy Gold

AR Preview
try it in your home

More Details
on our website