newform

DELUXE

68025.21.018

Single hole basin group - finish Chrome

Chrome

FEATURES

Material	**Brass**
Installation	**Freestanding**
Hole type	**Single hole**
Waste / Drain set	**With waste set**
Water mixing	**Mechanical**

TECHNICAL DRAWING

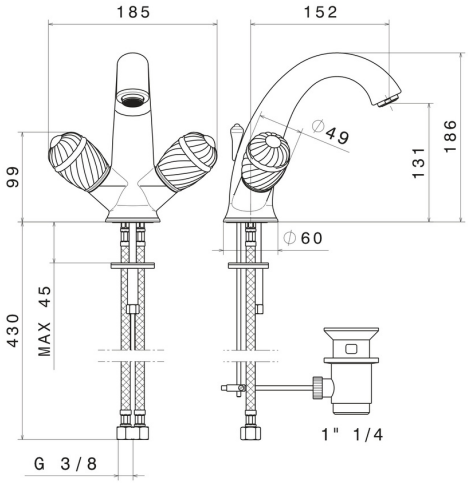

AR Preview
try it in your home

More Details
on our website

newform

DELUXE

68025.21.018

Single hole basin group - finish Chrome

AVAILABLE FINISHES

21.018
Chrome

66.019
finish Gold

AR Preview
try it in your home

More Details
on our website