newform

68473E.M2.071

Single lever concealed mixer with 2 ways out automatic diverter - finish Gold Satin - Matt black

External part. 1/2" connections.

Gold Satin - Matt black

FEATURES

Material	**Brass**
Installation	**Wall concealed part**
Control type	**Single lever**
Diverter type	**Mechanic diverter**
Outlets	**2 Ways Out**
Water mixing	**Mechanical**
Required for installation	**31087.00.000**

TECHNICAL DRAWING

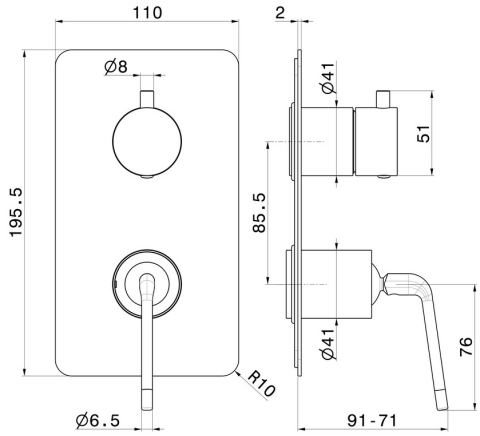

– newform

68473E.M2.071

Single lever concealed mixer with 2 ways out automatic diverter - finish Gold Satin - Matt black

AVAILABLE FINISHES

M2.071
Gold Satin - Matt black

01.093
finish Matt Black

05.093
finish Chrome - Matt Black

61.020
finish PVD Glossy Gold

M2.070
finish Titanium Satin - Matt black

M2.072
finish Copper Satin - Matt black

M2.075
finish Copper Glossy