newform

69681EX.59.098

Single lever mixer, hot and cold water, for personal hygiene and toilet. External part - finish PVD Brushed Pale Gold

SAVE WATER

PVD Brushed Pale Gold

FEATURES

Material	**Stainless Steel**
Technology	**Save Water**
Installation	**Wall concealed part**
Control type	**Single lever**
Water mixing	**Mechanical**
Required for installation	**27852.00.000**

TECHNICAL DRAWING

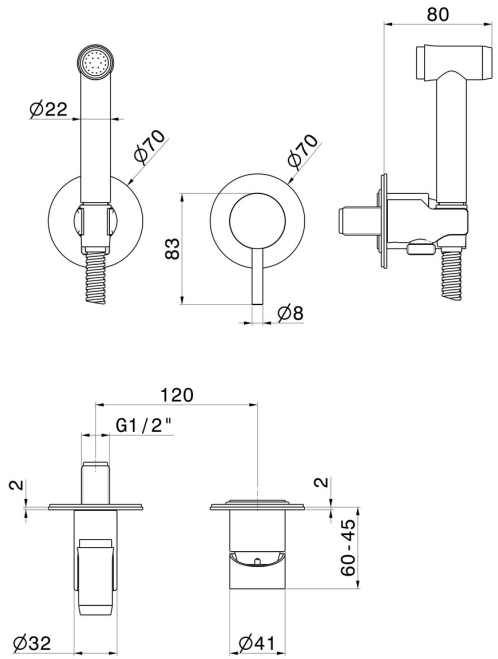

– newform

69681EX.59.098

Single lever mixer, hot and cold water, for personal hygiene and toilet. External part - finish PVD Brushed Pale Gold

AVAILABLE FINISHES

59.098
PVD Brushed Pale Gold

50.050
finish Stainless Steel

59.064
finish PVD Brushed Gun Metal

59.067
finish PVD Brushed Copper Bronze

59.097
finish PVD Brushed Gold