newform

MOONY

3125.59.066

Single-lever sink mixer, round swivel spout, with pull-out hand shower - finish PVD Brushed steel

SAVE WATER

ENERGY SAVING

PVD Brushed steel

FEATURES

Material	**Brass**
Technology	**Energy Saving - Save Water**
Installation	**Freestanding**
Kitchen mixer spout	**Round spout - Swivel spout**
Control type	**Single lever**
Kitchen mixer type	**Extractable hand shower**

TECHNICAL DRAWING

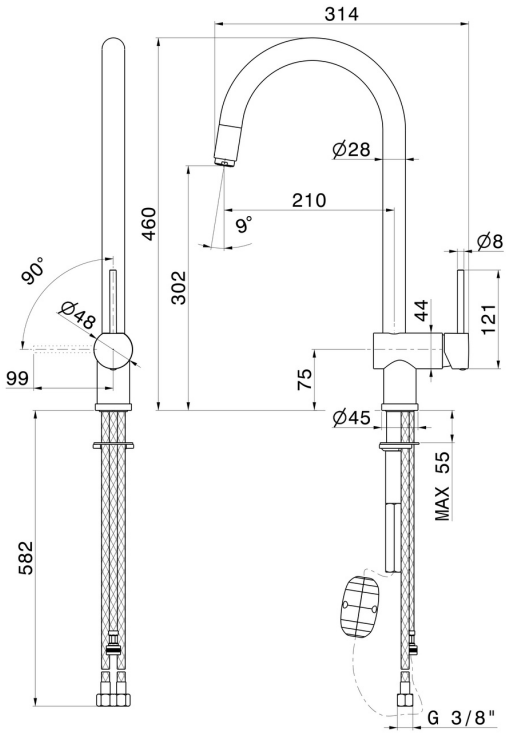

newform

MOONY

3125.59.066

Single-lever sink mixer, round swivel spout, with pull-out hand shower - finish PVD Brushed steel

AVAILABLE FINISHES

59.066
PVD Brushed steel

01.093
finish Matt Black

21.018
finish Chrome

31.028
finish Brushed Nickel

59.064
finish PVD Brushed Gun Metal

59.067
finish PVD Brushed Copper Bronze

M0.077
finish Carbon Satin