newform

MOONY

3125.M0.077

Single-lever sink mixer, round swivel spout, with pull-out hand shower - finish Carbon Satin

SAVE WATER

ENERGY SAVING

Carbon Satin

FEATURES

Material	**Brass**
Technology	**Energy Saving - Save Water**
Installation	**Freestanding**
Kitchen mixer spout	**Round spout - Swivel spout**
Control type	**Single lever**
Kitchen mixer type	**Extractable hand shower**

TECHNICAL DRAWING

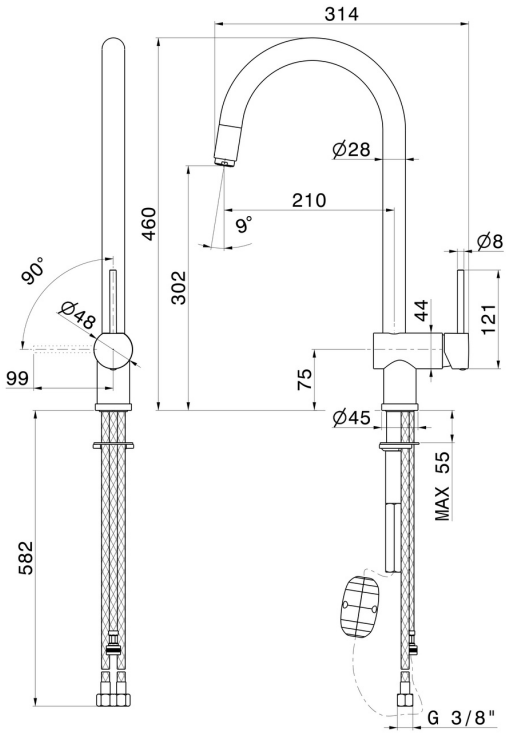

newform

MOONY

3125.M0.077

Single-lever sink mixer, round swivel spout, with pull-out hand shower - finish Carbon Satin

AVAILABLE FINISHES

M0.077
Carbon Satin

01.093
finish Matt Black

21.018
finish Chrome

31.028
finish Brushed Nickel

59.064
finish PVD Brushed Gun Metal

59.066
finish PVD Brushed steel

59.067
finish PVD Brushed Copper Bronze