newform

REAL

63425.43.238

Single-lever sink mixer with L swivel spout and pull-out hand shower - finish Anthracite

ENERGY SAVING

Anthracite

FEATURES

Material	**Brass**
Technology	**Energy Saving**
Installation	**Freestanding**
Kitchen mixer spout	**L swivel - Swivel spout**
Control type	**Single lever**
Kitchen mixer type	**Extractable hand shower**

TECHNICAL DRAWING

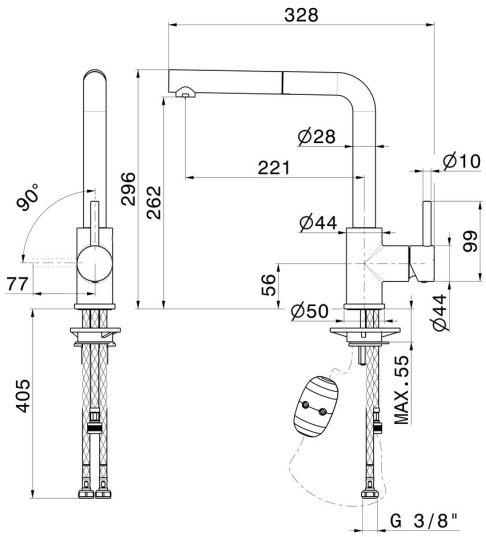

newform

REAL

63425.43.238

Single-lever sink mixer with L swivel spout and pull-out hand shower - finish Anthracite

AVAILABLE FINISHES

43.238
Anthracite

21.018
finish Chrome

31.028
finish Brushed Nickel

59.064
finish PVD Brushed Gun Metal

59.066
finish PVD Brushed steel

59.067
finish PVD Brushed Copper Bronze

59.098
finish PVD Brushed Pale Gold