newform

XT

4228E.01.014

Single lever wall mixer group - finish Matt White

External part. Without pop-up waste set.

SAVE WATER

Matt White

FEATURES

Material	**Brass**
Technology	**Save Water**
Installation	**Wall concealed part**
Spout	**Standard spout**
Hole type	**2 holes**
Control type	**Single lever**
Waste / Drain set	**Without waste set**
Water mixing	**Mechanical**
Required for installation	**27852.00.000**

TECHNICAL DRAWING

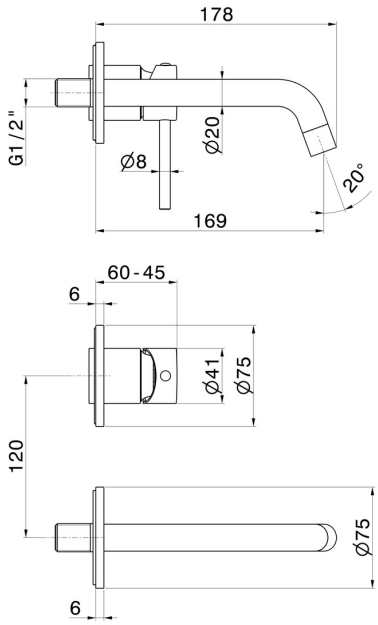

AR Preview
try it in your home

More Details
on our website

– newform

XT

4228E.01.014

Single lever wall mixer group - finish Matt White

AVAILABLE FINISHES

01.014
Matt White

01.093
finish Matt Black

21.018
finish Chrome

58.061
finish PVD Copper Bronze

58.063
finish PVD Gun Metal

61.020
finish PVD Glossy Gold

M0.070
finish Titanium Satin

M0.071
finish Gold Satin

M0.072
finish Copper Satin

M0.075
finish Copper Glossy

M0.077
finish Carbon Satin

AR Preview
try it in your home

More Details
on our website