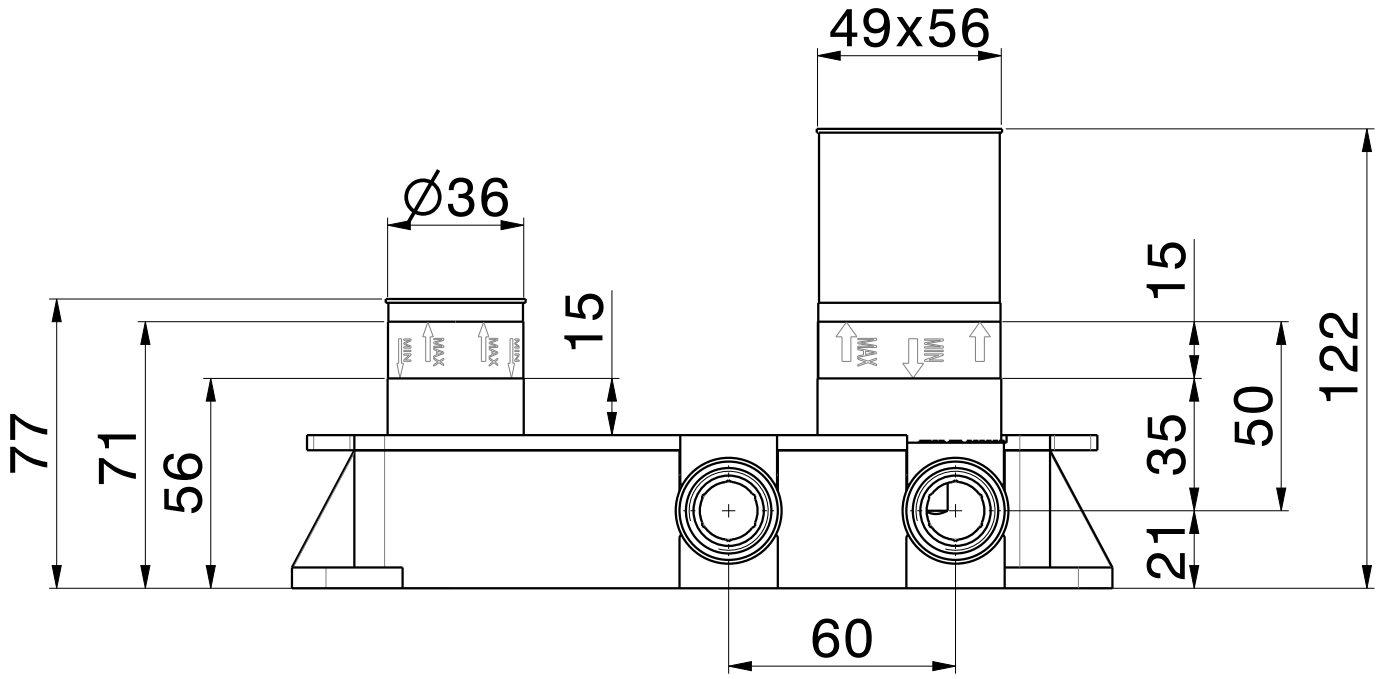
49x56
Ø36
15
15
122
50
35
21
77
71
56
60
MAX
MIN

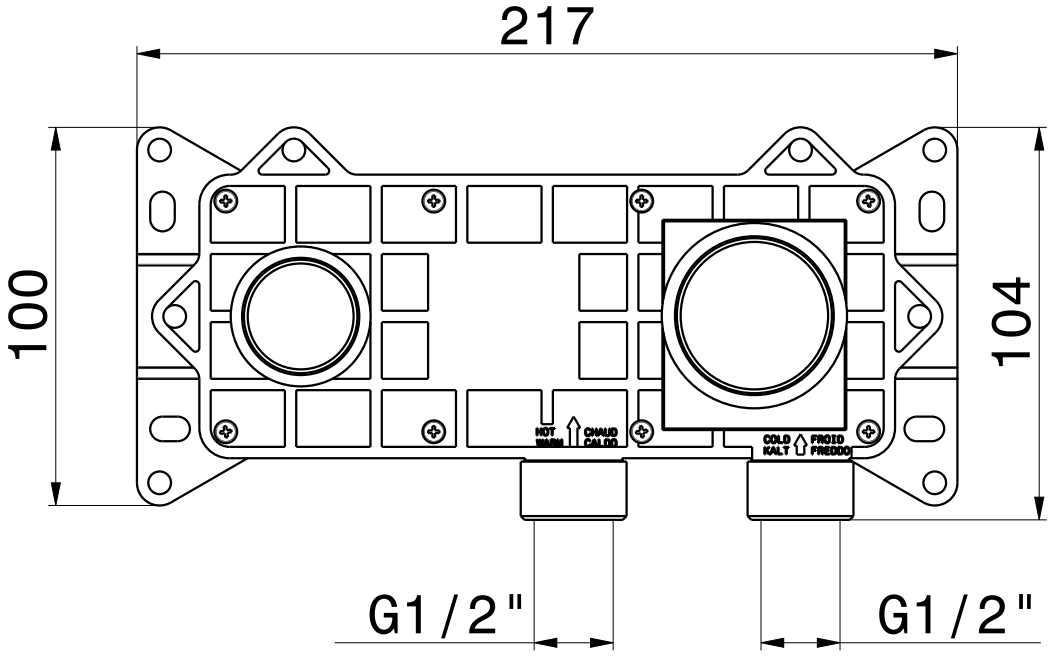
217
100
104
HOT
WARM
CHAUD
CALDO
COLD
KALT
FROID
FREDDO
G1/2"
G1/2"

ERGO-Q '27853'