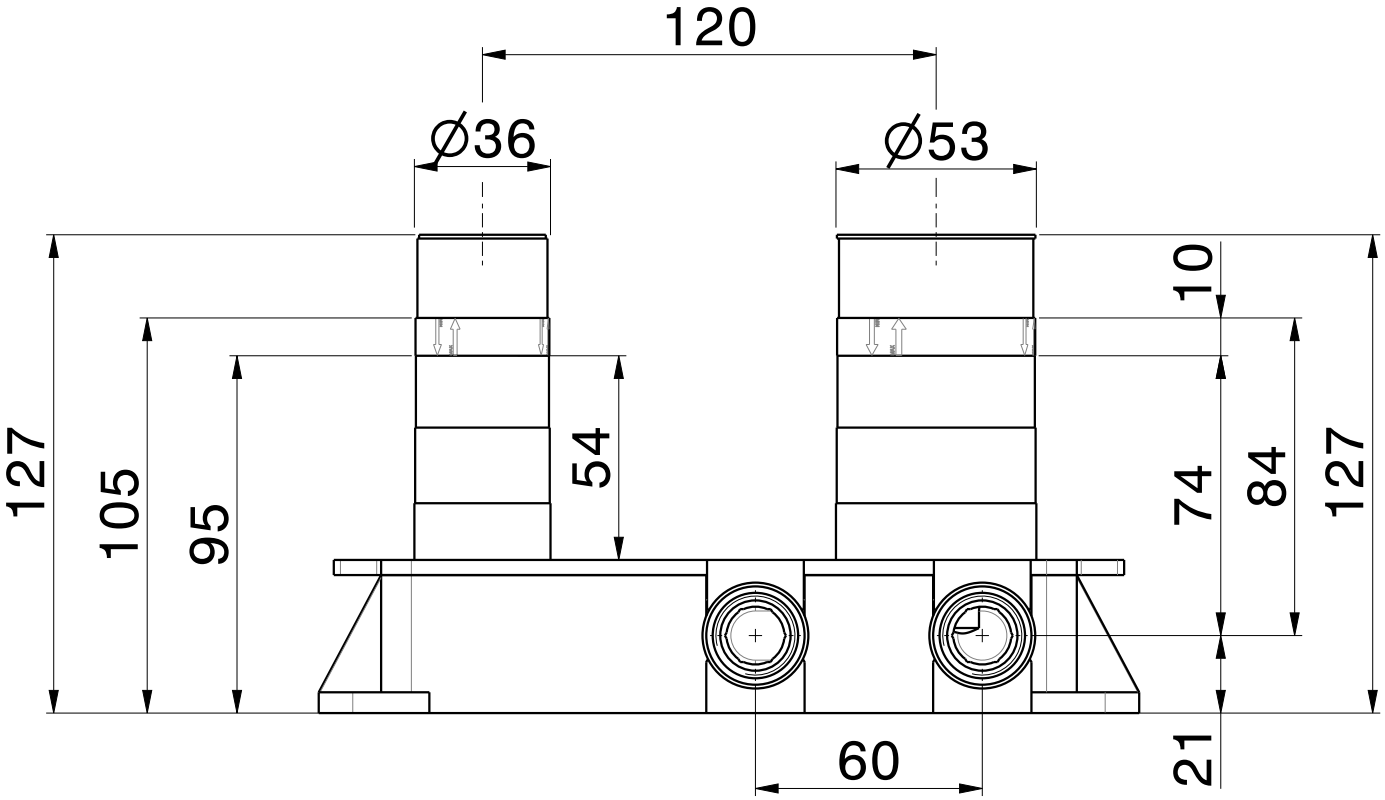
120
Ø36
Ø53
10
127
105
95
54
74
84
127
60
21

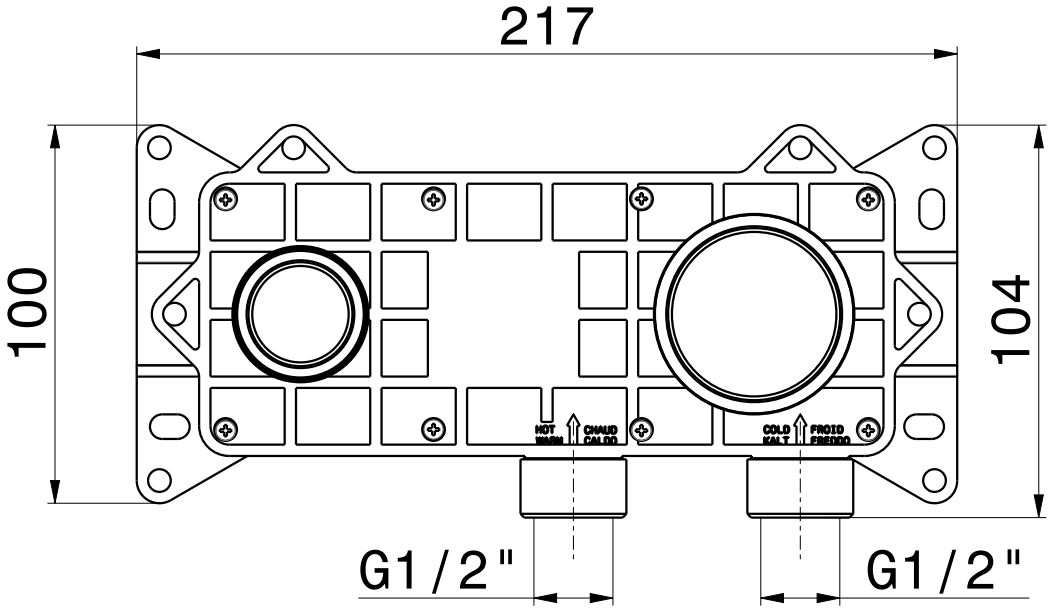
217
100
104
HOT
WARM
CHAUD
CALDO
COLD
KALT
FROID
FREDDO
G1/2"
G1/2"

O'RAMA '27855'