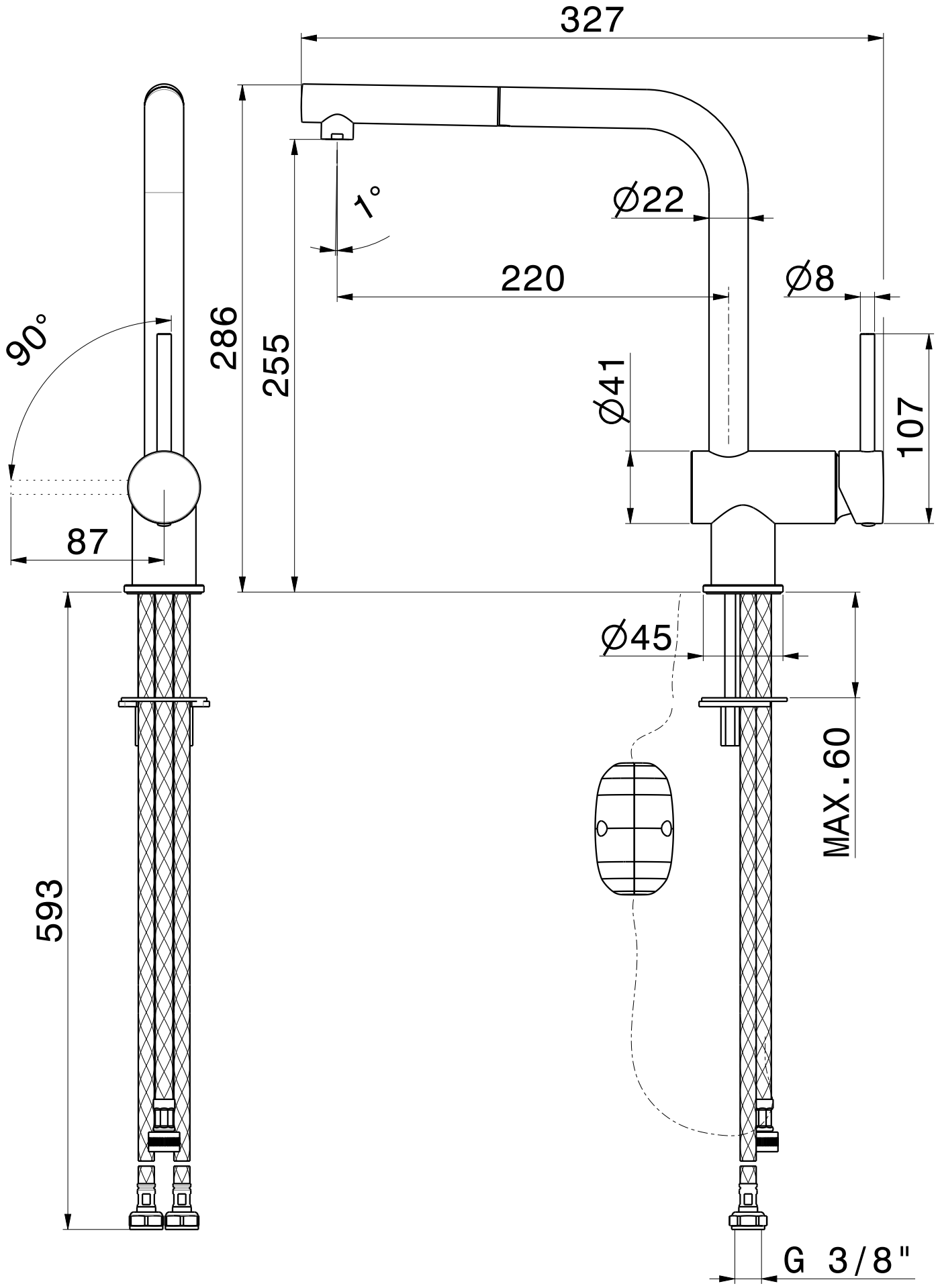
327
1°
∅22
220
∅8
90°
286
255
∅41
107
87
∅45
MAX. 60
593
G 3/8"