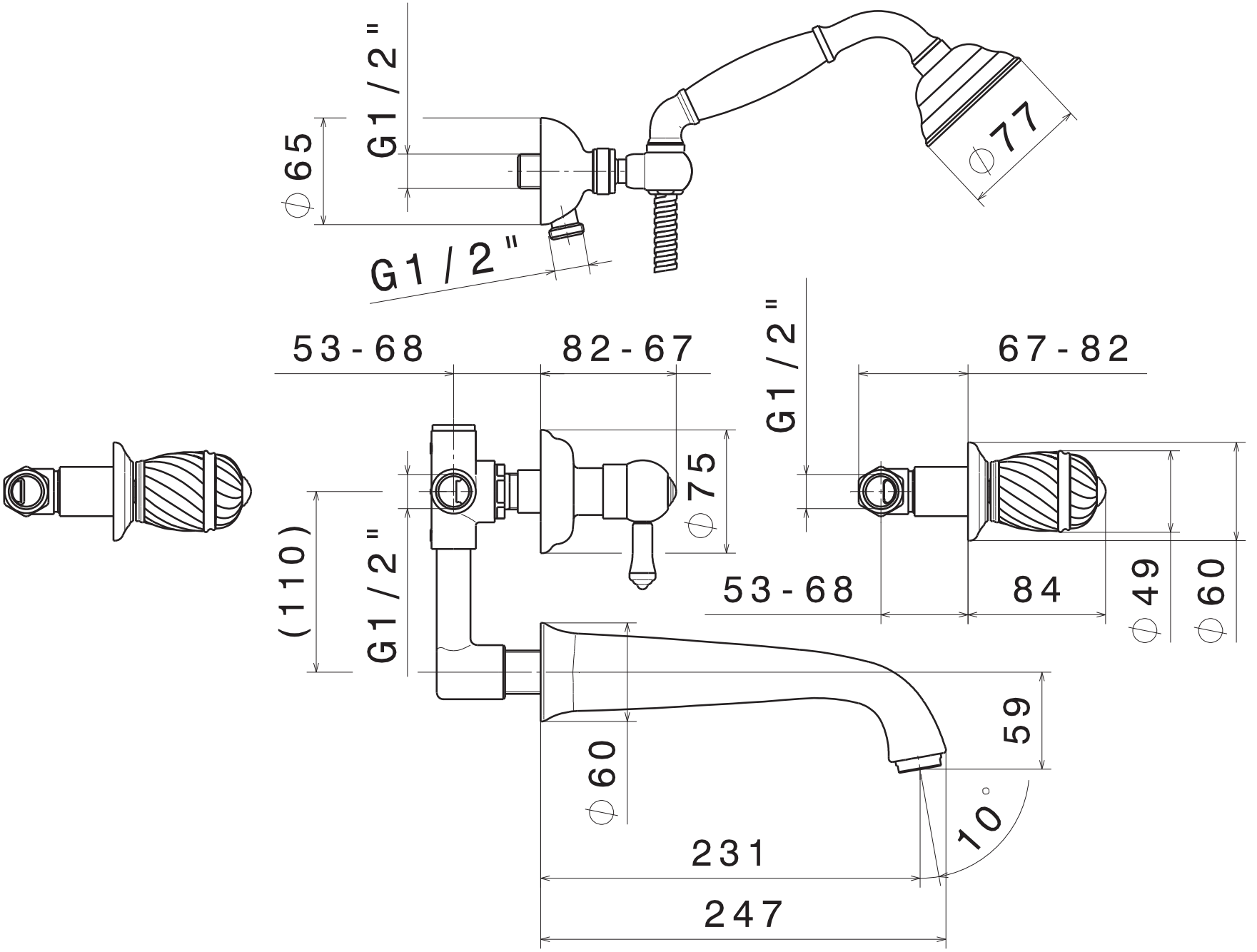
G1/2"
⌀65
G1/2"
⌀77
53-68
82-67
G1/2"
67-82
⌀75
(110)
G1/2"
53-68
84
⌀49
⌀60
59
⌀60
10°
231
247