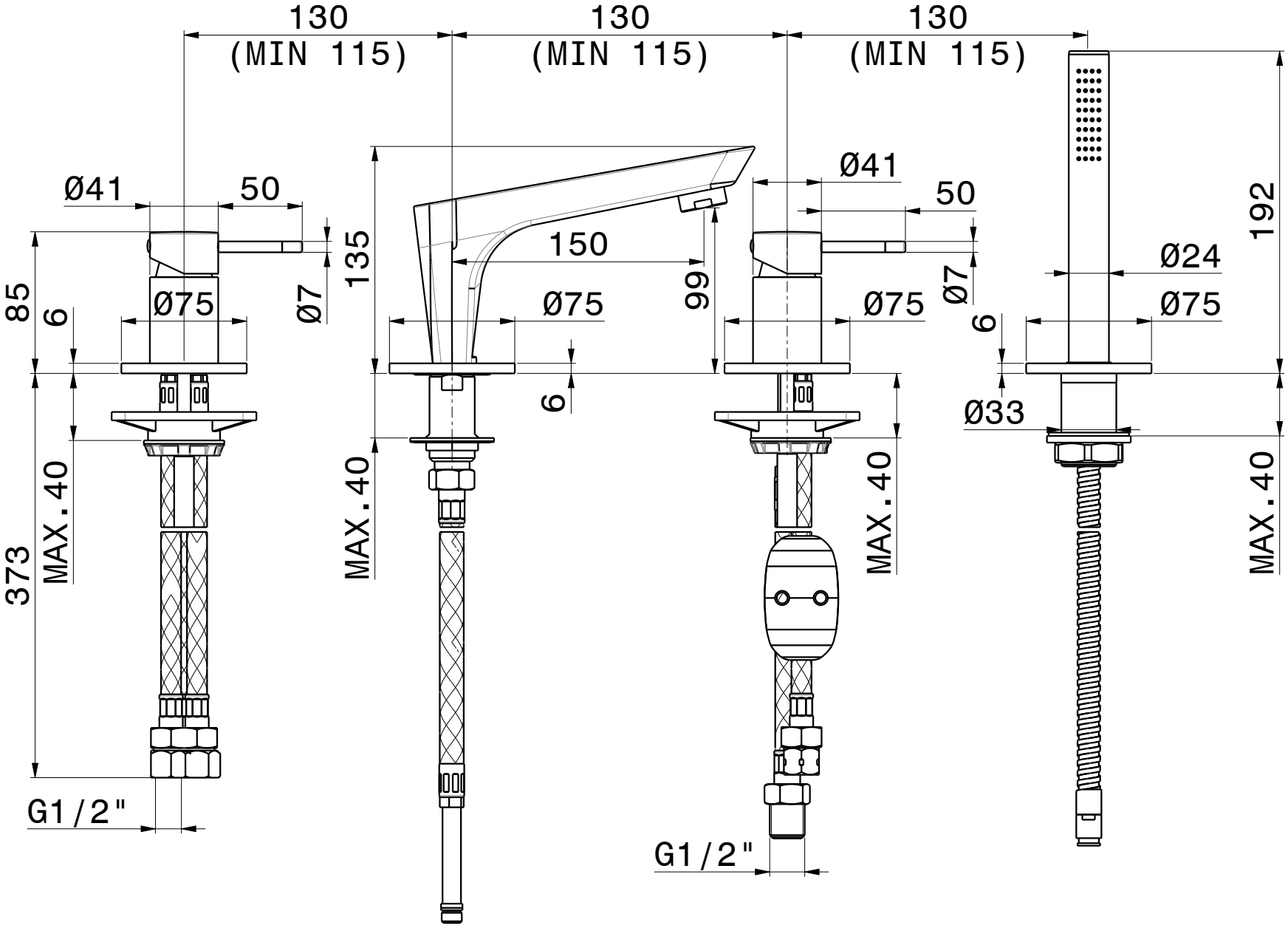
130
(MIN 115)
130
(MIN 115)
130
(MIN 115)
Ø41
50
85
6
Ø75
Ø7
373
MAX.40
G1/2"
135
150
99
Ø75
6
MAX.40
Ø41
50
Ø7
Ø75
MAX.40
G1/2"
192
Ø24
Ø75
6
Ø33
MAX.40