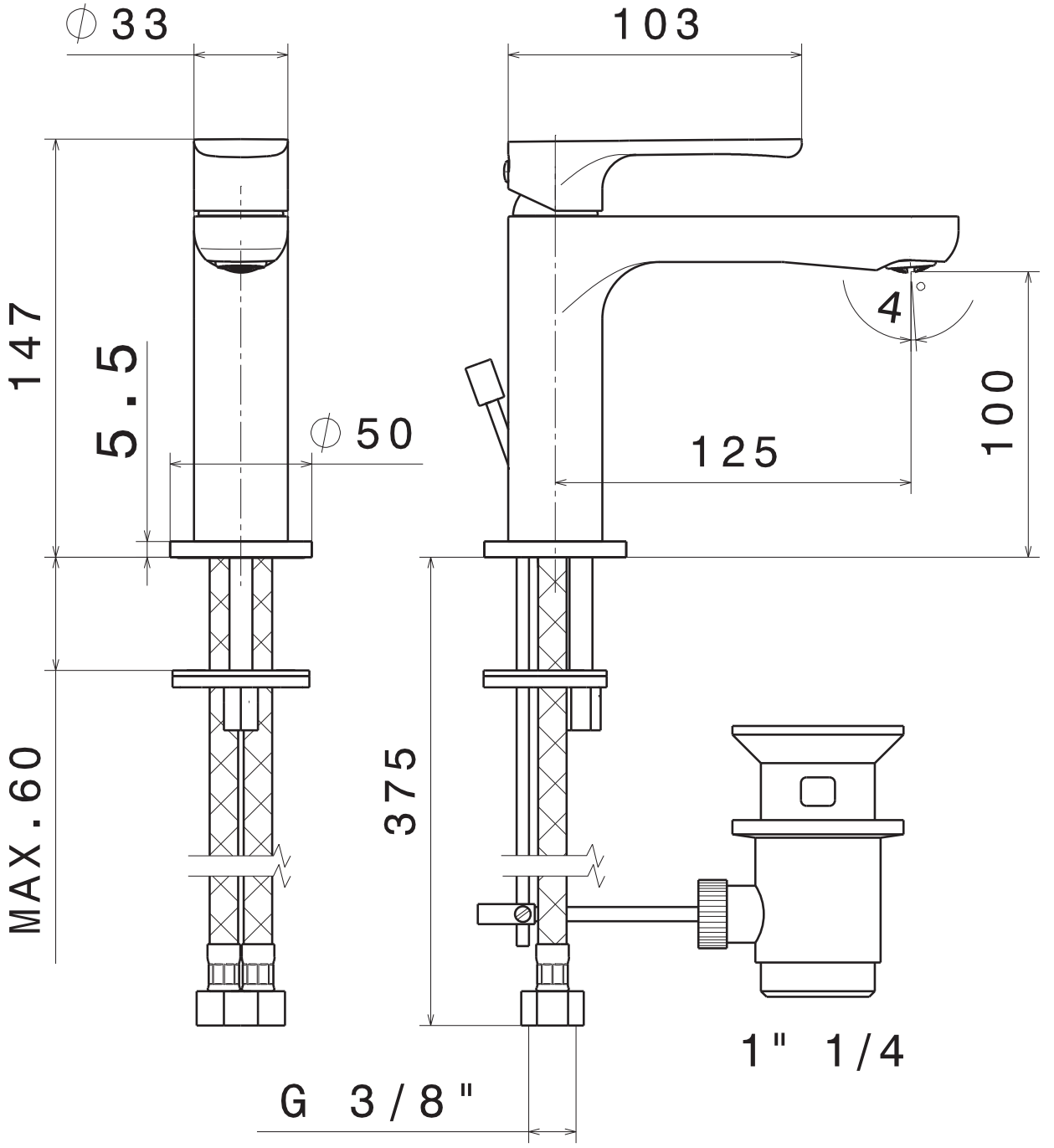
∅33
103
147
5.5
∅50
4°
100
125
MAX.60
375
1" 1/4
G 3/8"