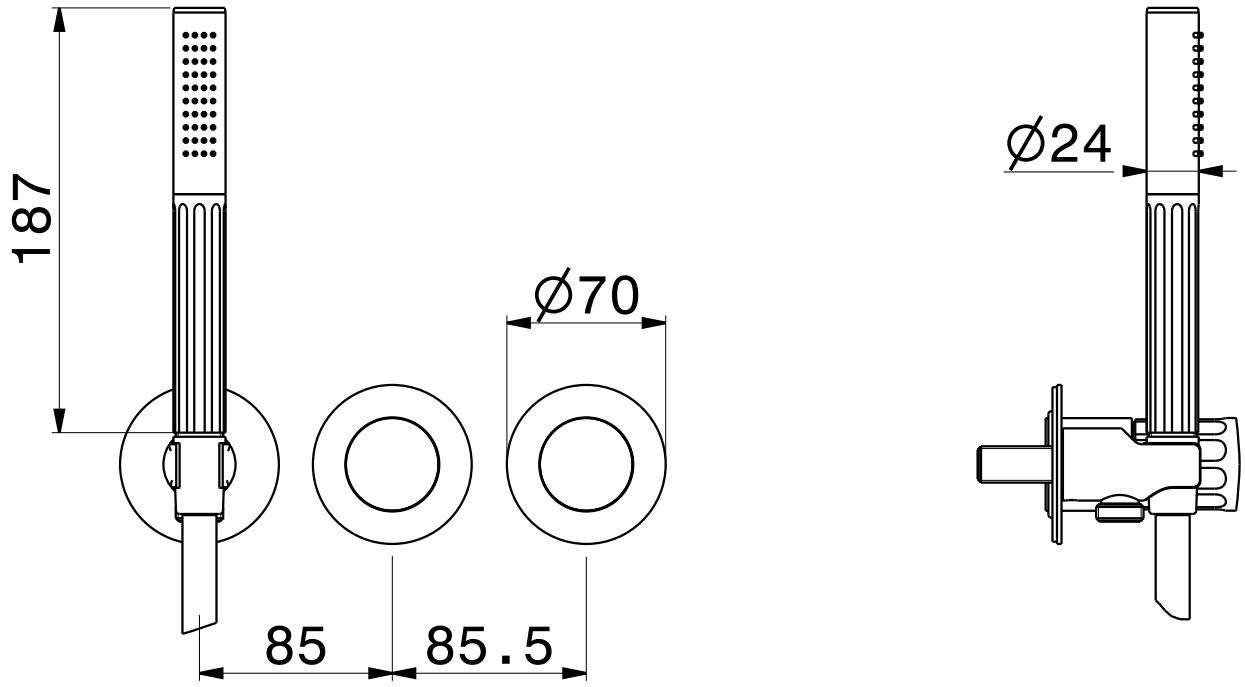
187
∅70
85
85.5
∅24

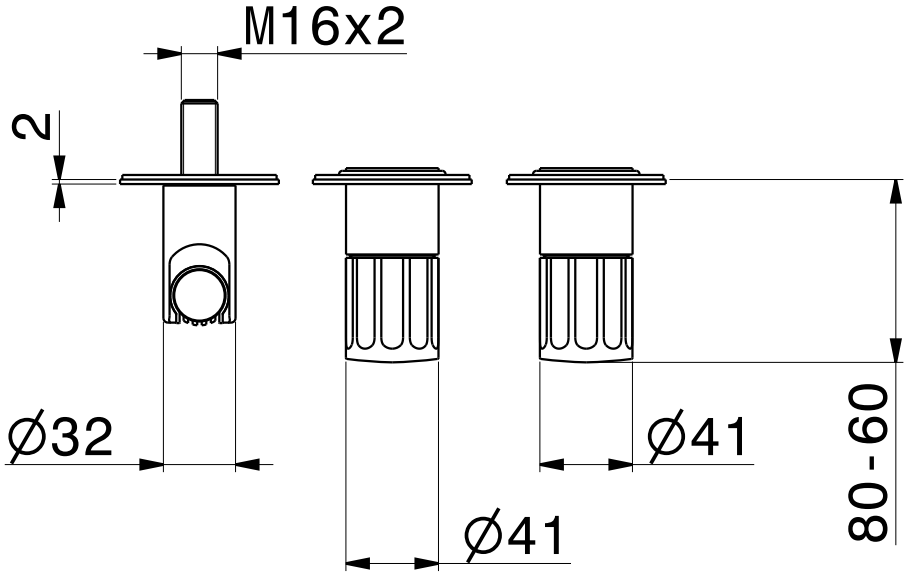
M16x2
2
∅32
∅41
∅41
80-60