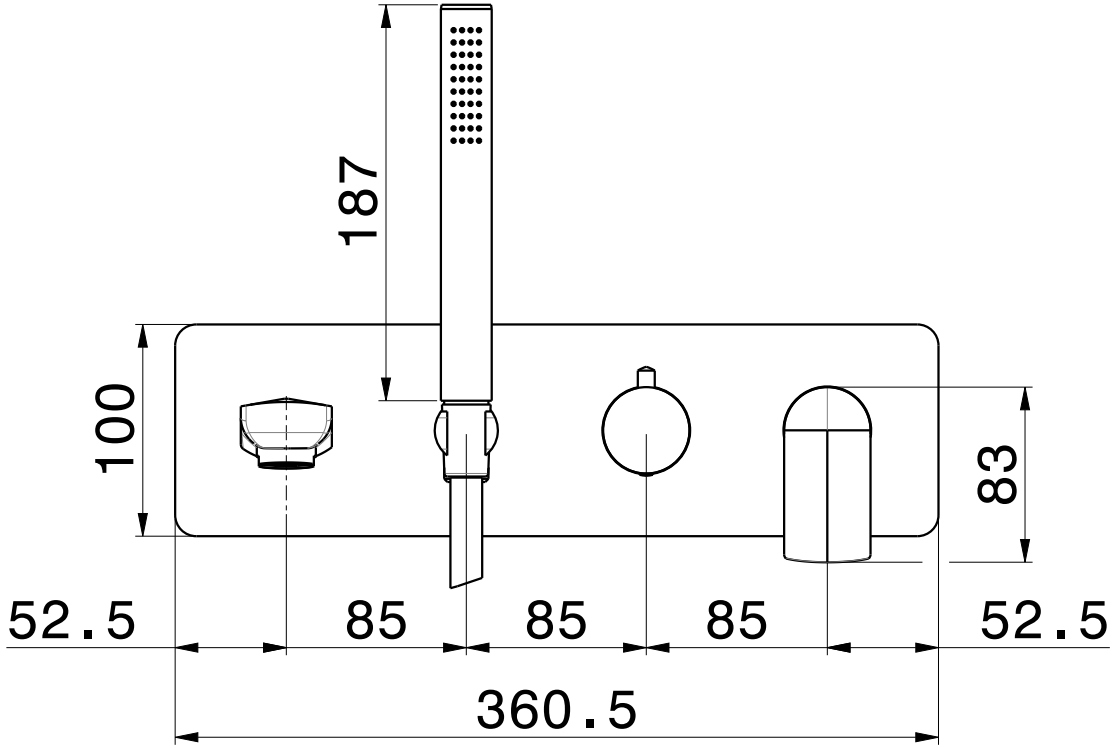

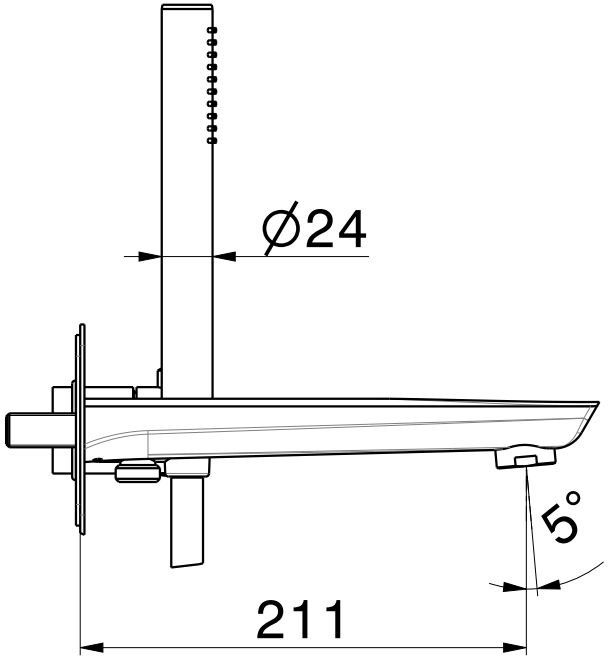

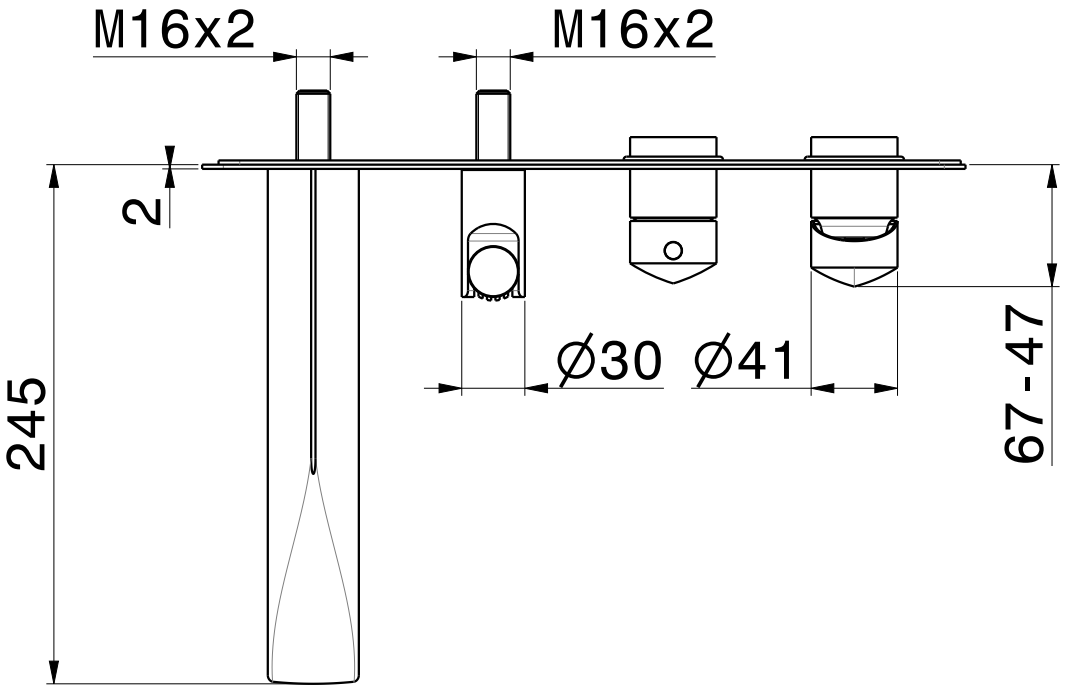

DELTA-0 '72272E'