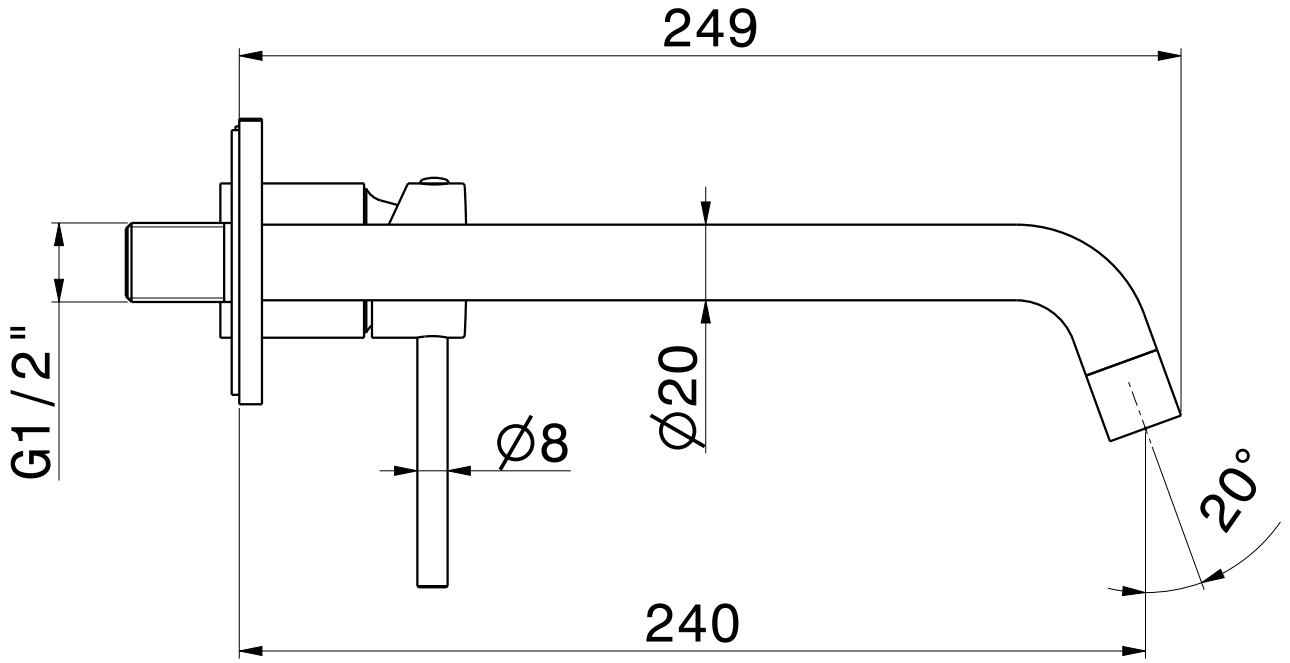

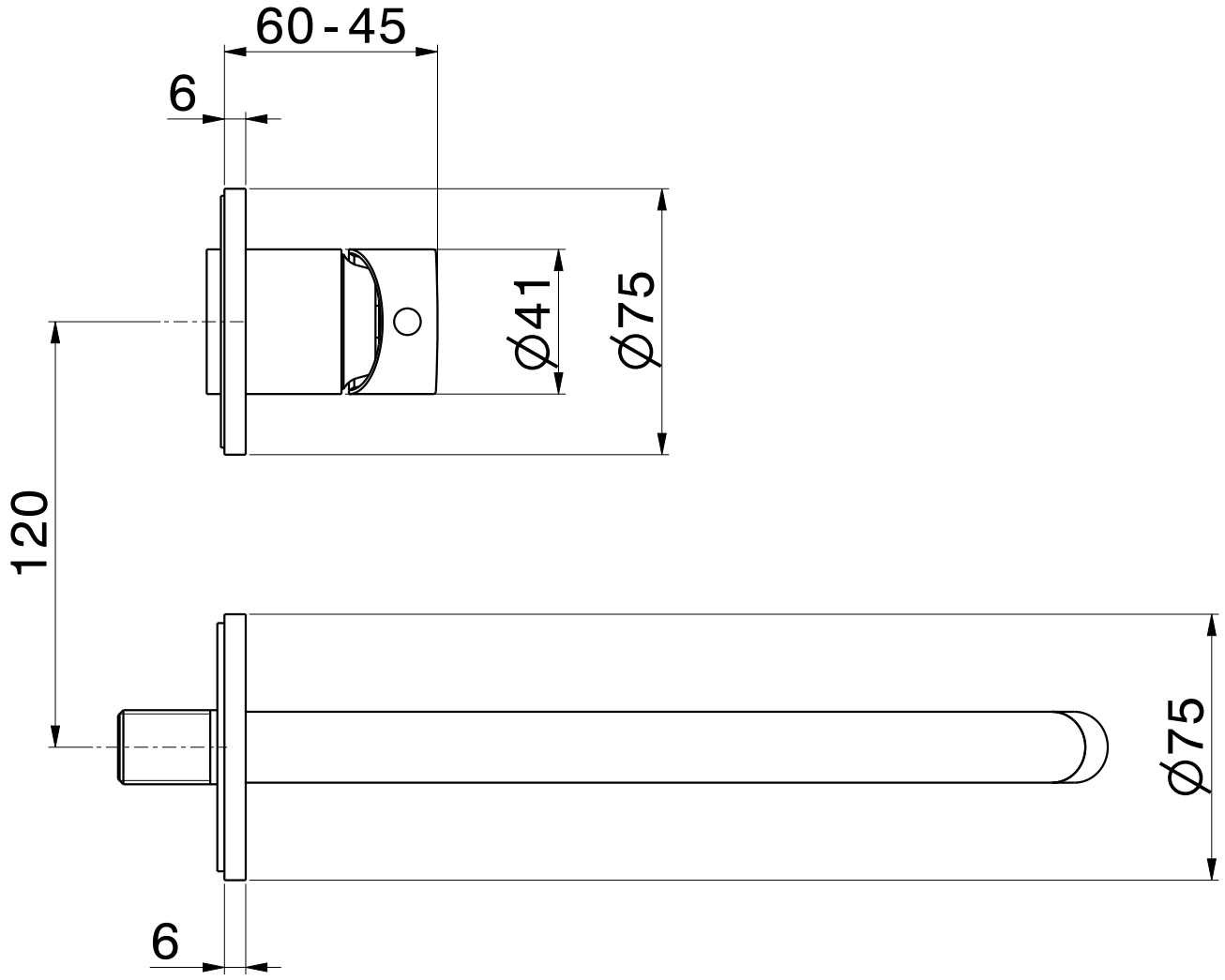

X-T '4230E'