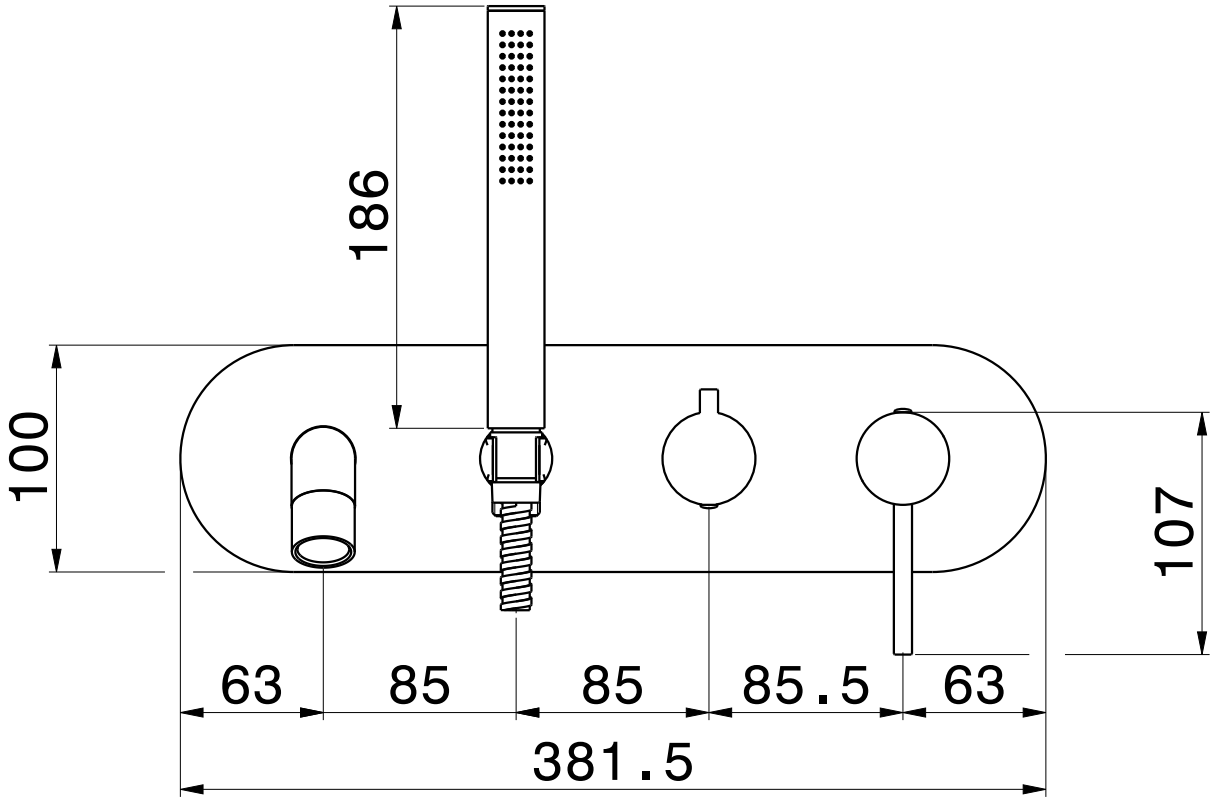
186
100
107
63
85
85
85.5
63
381.5

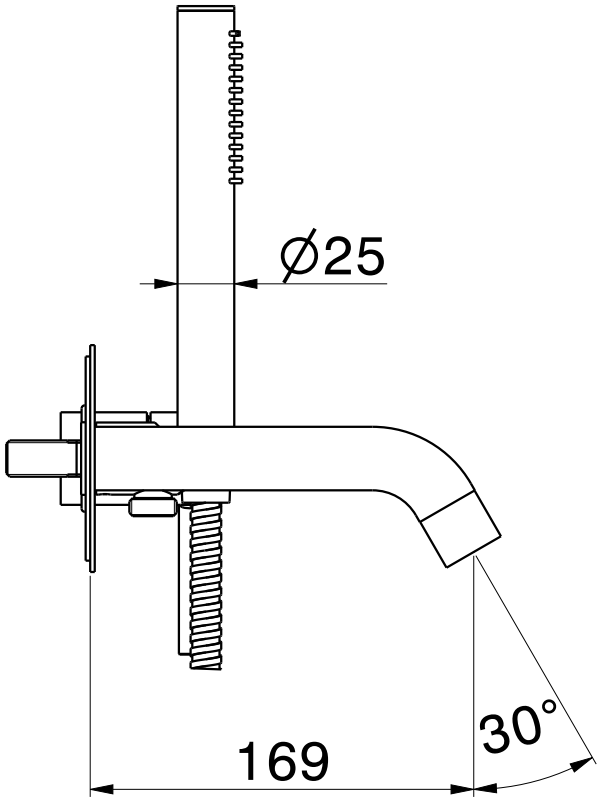
Ø25
169
30°

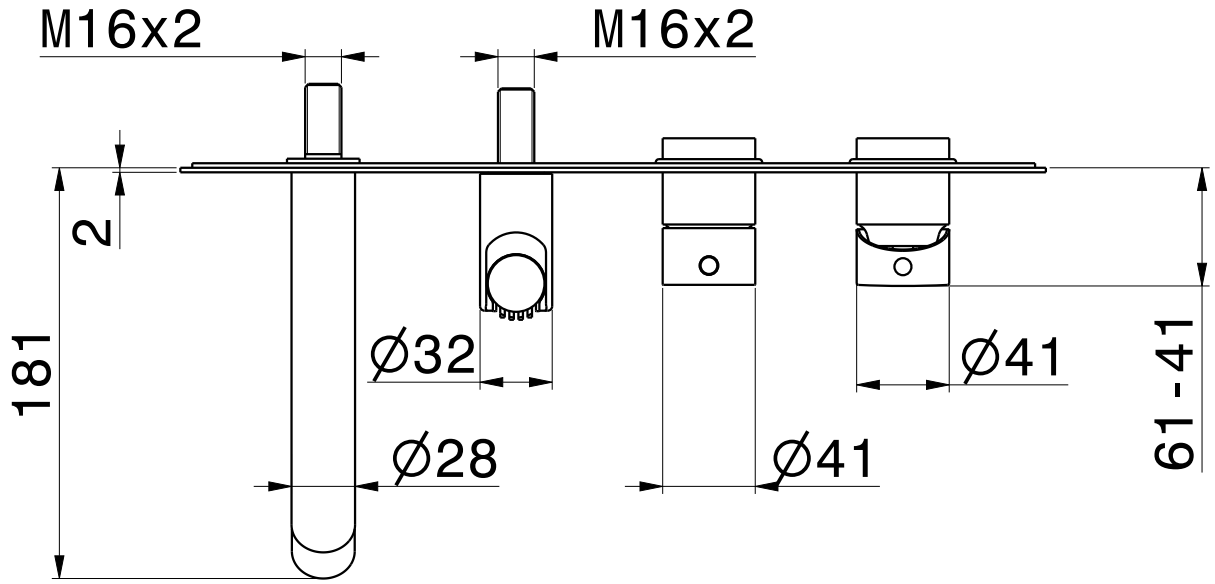
M16x2
M16x2
2
181
Ø32
Ø28
Ø41
Ø41
61-41

X-T '4272E'