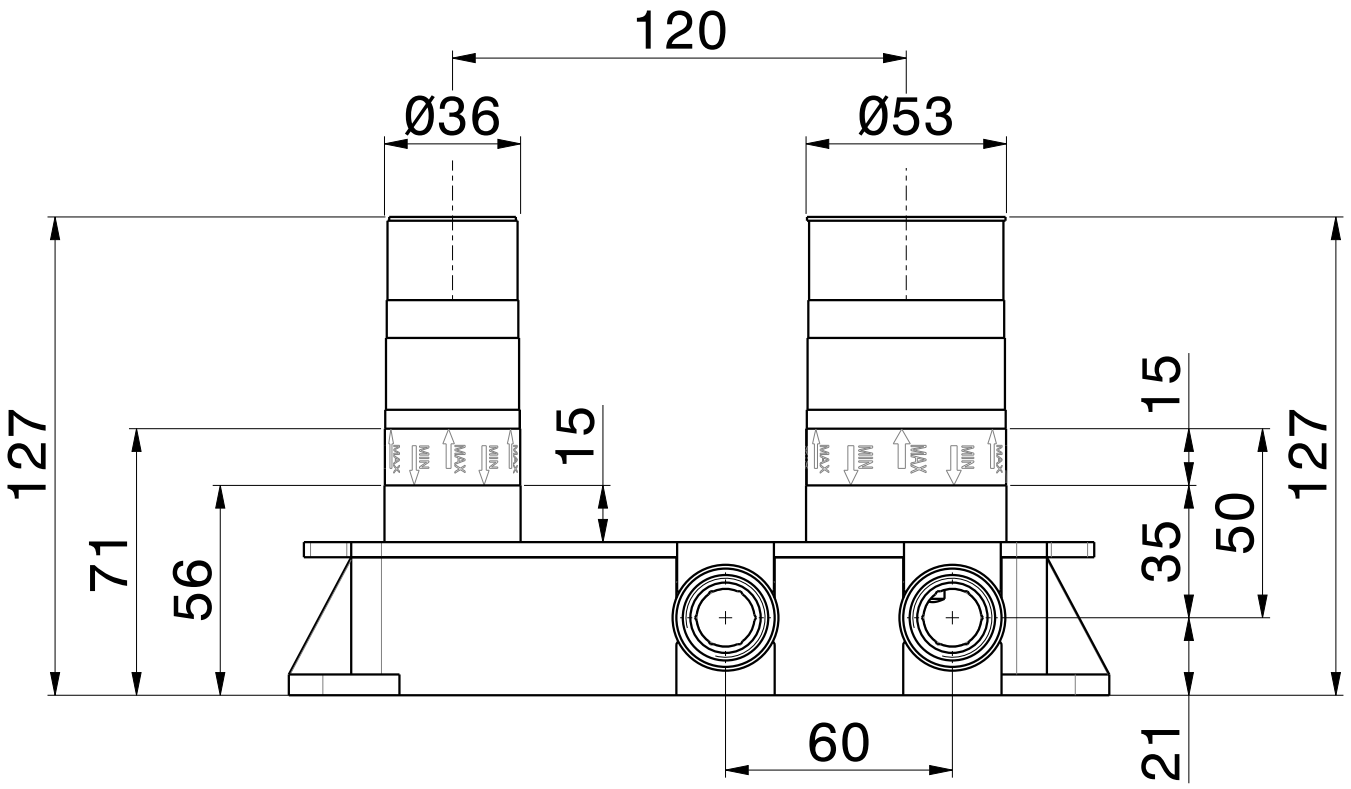

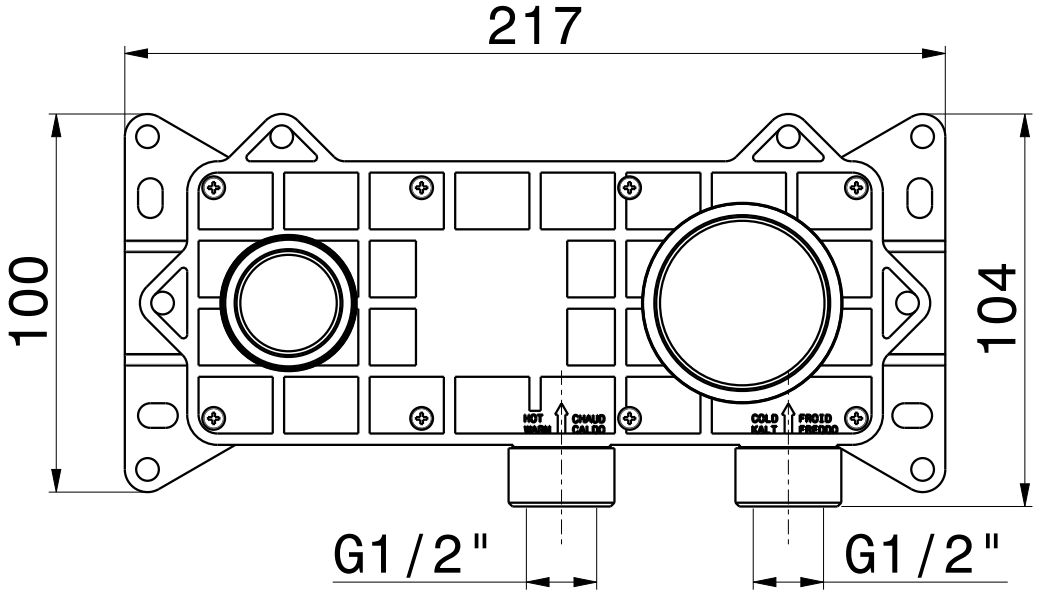

IONIKA '31076'