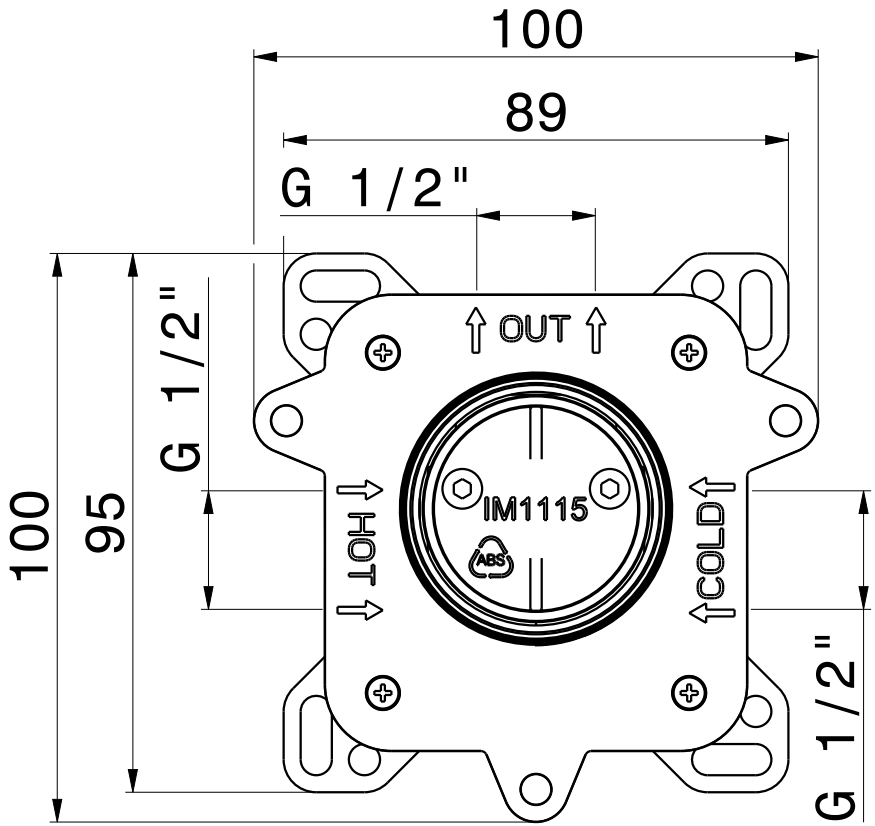
100
89
G 1/2"
G 1/2"
100
95
OUT
HOT
COLD
IM1115
ABS
G 1/2"

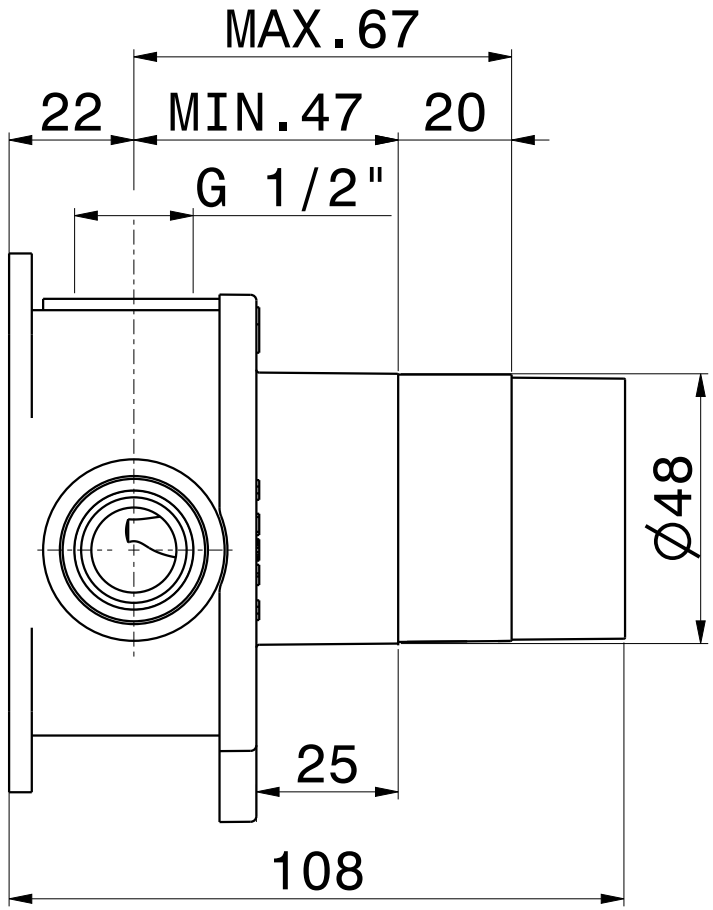
MAX.67
22
MIN.47
20
G 1/2"
Ø48
25
108

'31085'