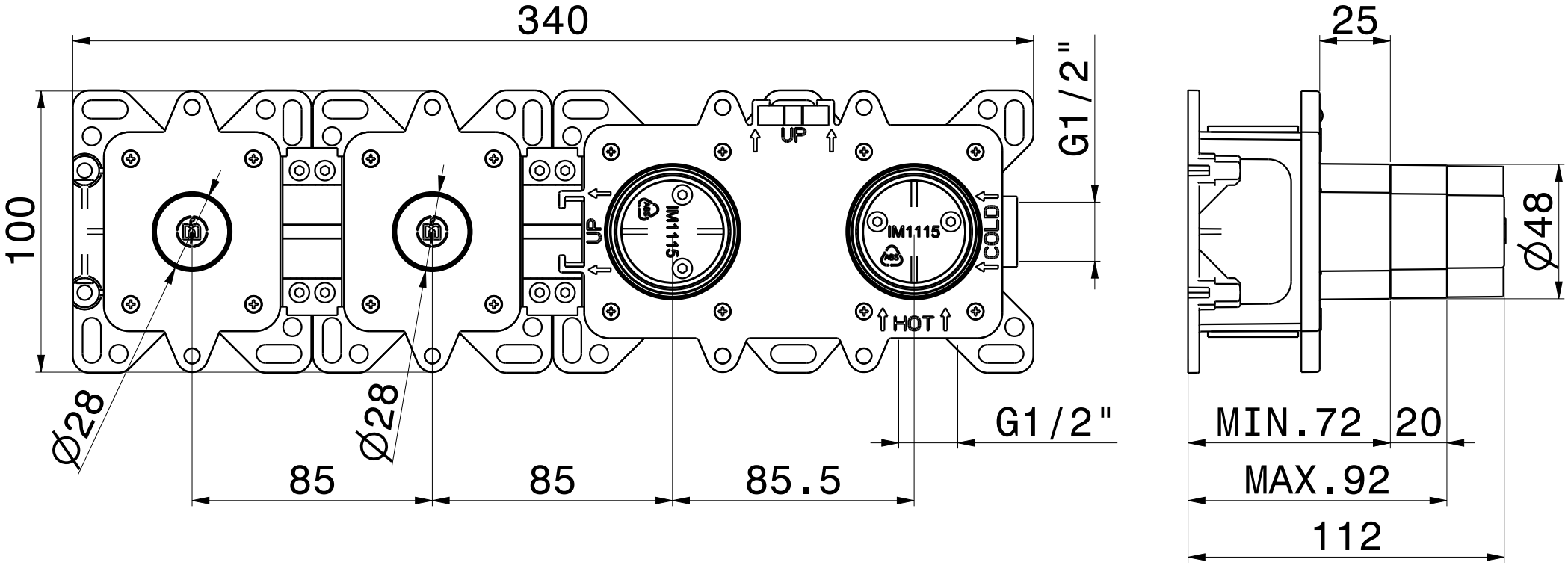
340
100
G1/2"
UP
UP
IM1115
IM1115
COLD
HOT
Ø28
Ø28
85
85
85.5
G1/2"
25
Ø48
MIN.72
20
MAX.92
112

'31088'