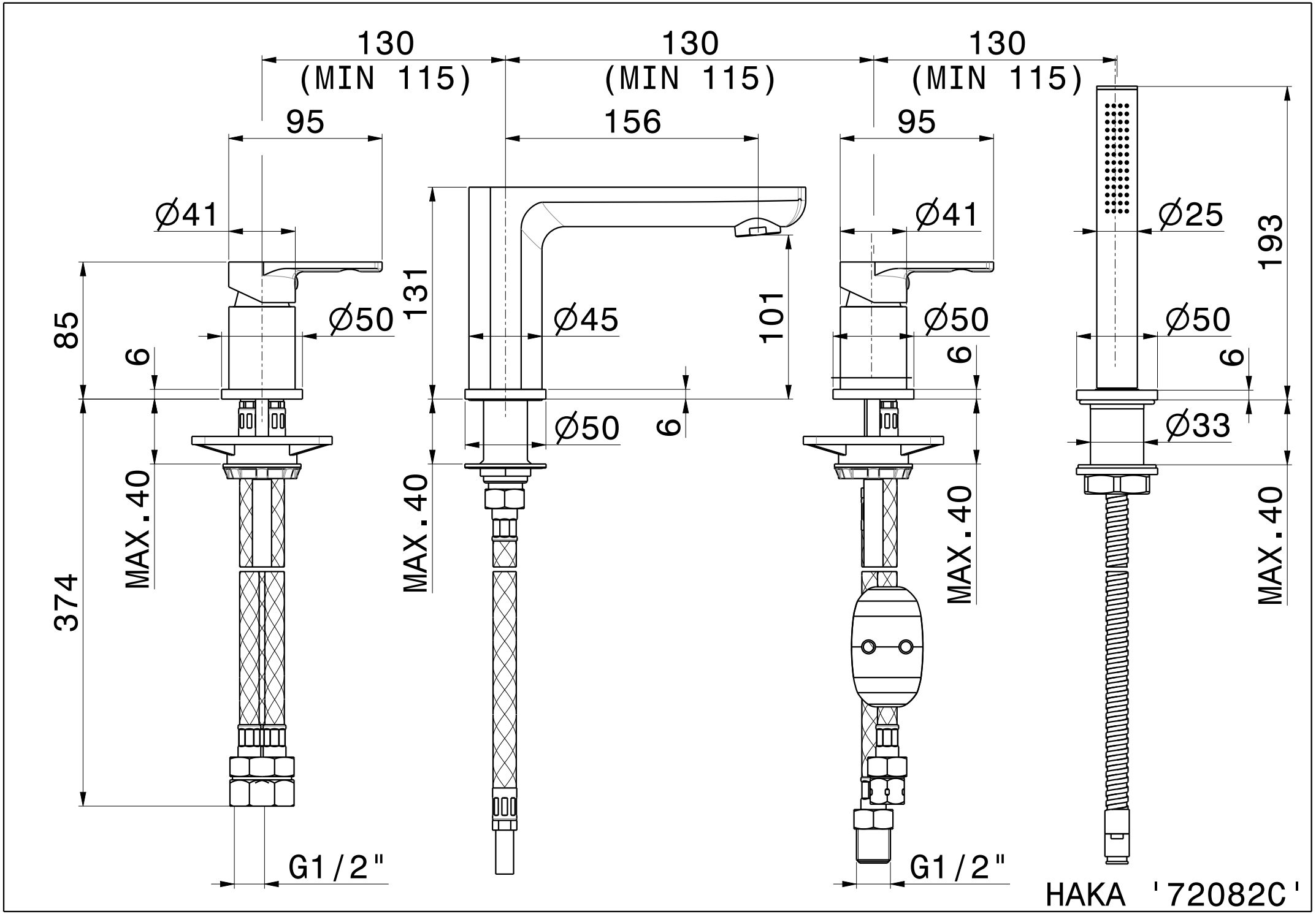
130
(MIN 115)
130
(MIN 115)
130
(MIN 115)
95
156
95
Ø41
Ø41
Ø25
193
85
Ø50
131
Ø45
101
Ø50
Ø50
6
6
6
Ø50
6
Ø33
MAX.40
MAX.40
MAX.40
MAX.40
374
G1/2"
G1/2"
HAKA '72082C'