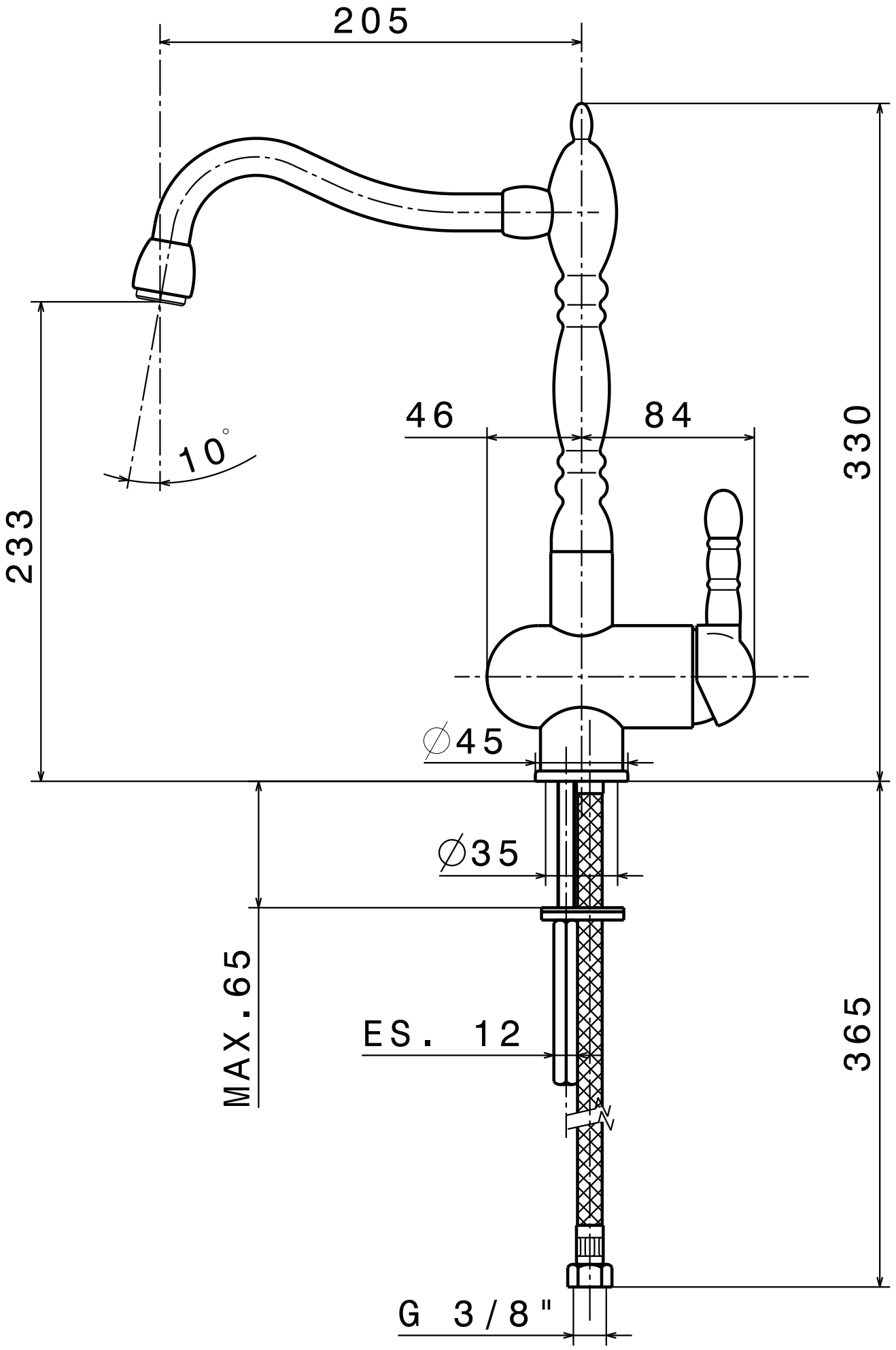

(C00276)

MARVEL '8550'