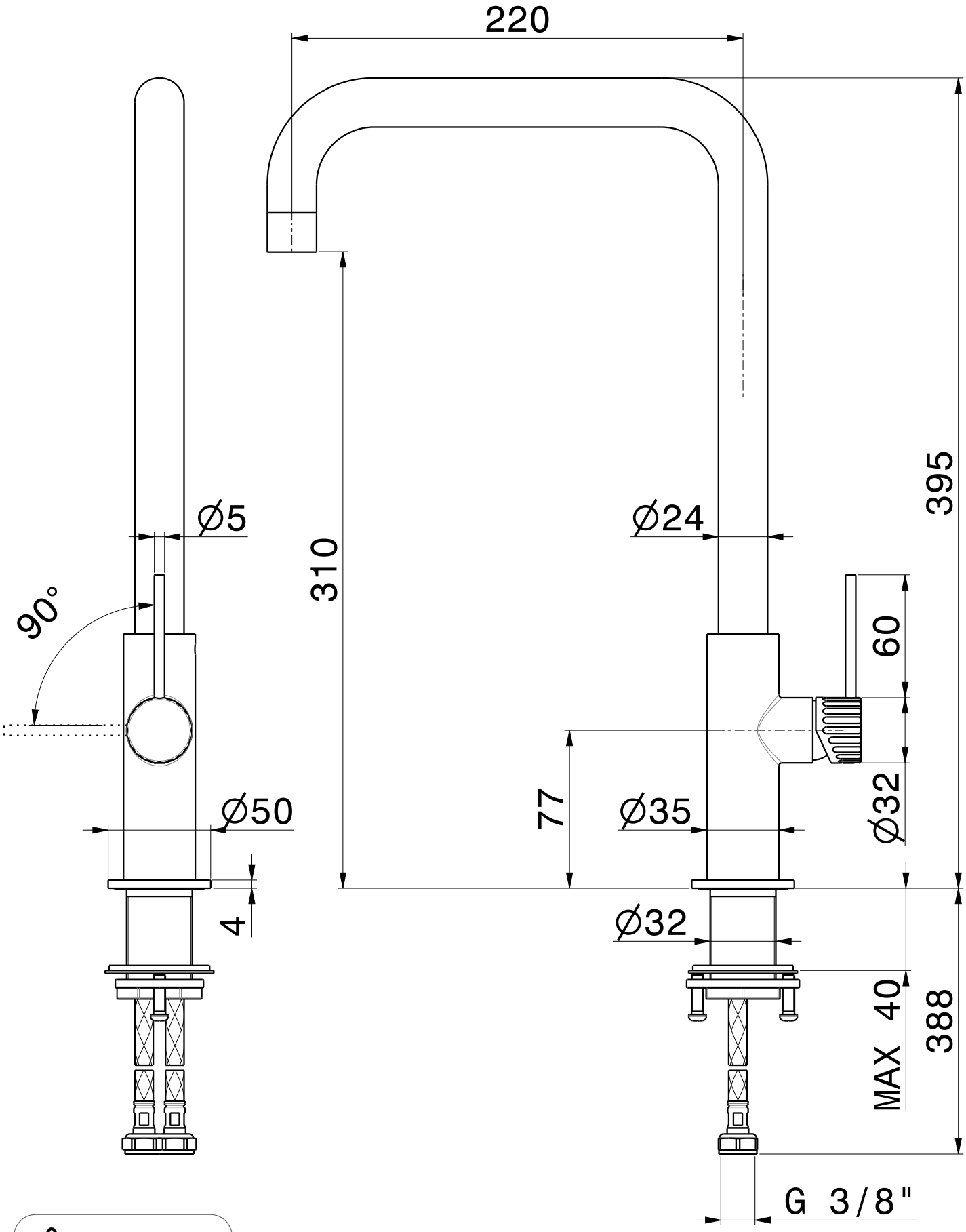

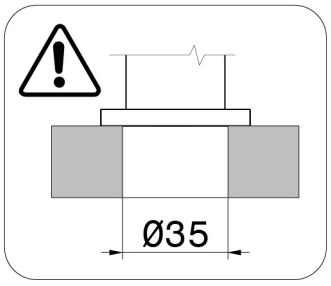

STEEL LINE '74120X'