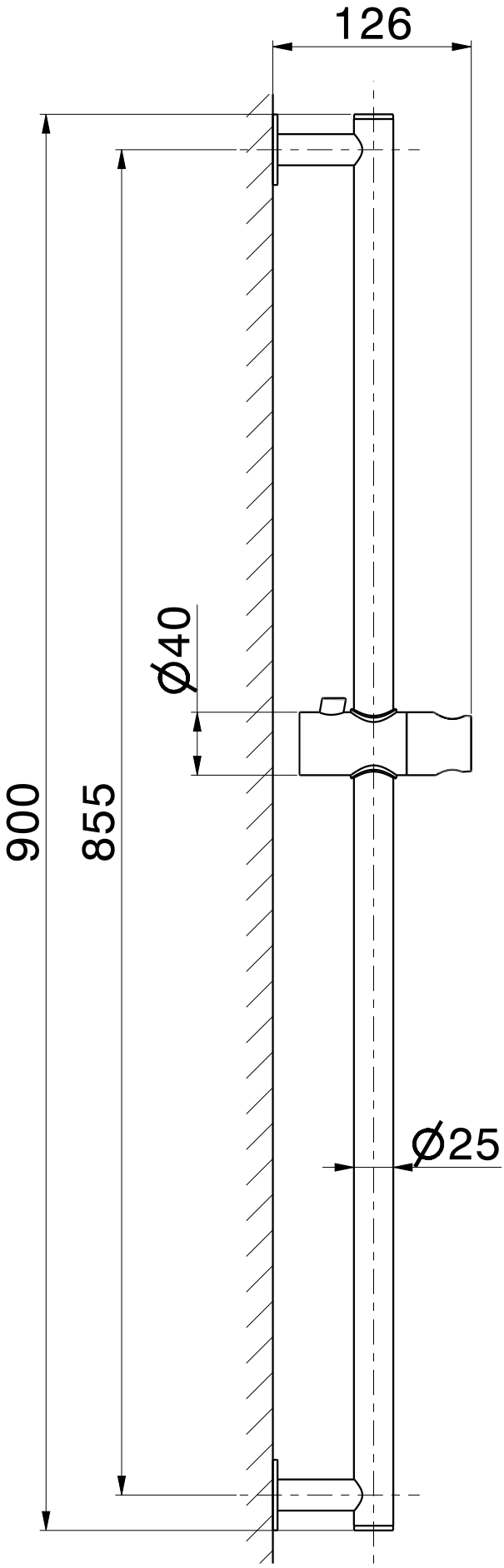

'831'